Korea monthly shipbuilding magazine

KORSHIP

Shipbuilding · Offshore · Oil & Gas · Offshore wind

Vol.109

2018. 7

Kormarine
Official Magazine
코마린
전시회 공식 매체

Feature Story

KOREA'S THREE DOMESTIC SHIPBUILDING HEAVYWEIGHTS LOSING GROUND IN OFFSHORE PLANT SECTOR

Technology

OFFSHORE PERFORMANCE PERMUTATIONS

- Wärtsilä Corporation

Issue

ABB Ability™ lands major deal for nine heavy lift vessels

Coldharbour targets Greek market as BW demand picks up

대우조선해양, 3조원 규모 육상 원유생산 플랜트 첫 모듈 출항

(Source: Hyundai Mipo Dockyard Co., Ltd.)

ADOS
EST. 1900

115년 전통의 독일가스 전문업체

Continuous measurement of gases

ADOS GTR 210

Application :

Chemical industry, Manufacture of paints and varnishes, Plastics processing plants, Sewage works, Biogas plants, Gas-fired boiler systems, Liquid gas storage houses, Laboratories, Oxygen concentration, measurements, Refineries, Cold storage houses, (ammonia monitoring), Paint spraying booths, Gas tankers, Container ships, Offshore plattforms, Applications in aggressive environments

(주)인터피엔
INTERPEEN

서울시 구로구 디지털로 26길 111 JnK디지털타워 1704호
전화 : 02)6124-5750~2 팩스: 02)6124-5753
URL: www.interpeen.co.kr
E-mail: msbang@interpeen.co.kr

Kormarine
Official Magazine

코마린 전시회
독점 공식 지정 매체

조선&해양 총람
'2016년 개정판' 발행

2016년 개정판

조선 & 해양 총람 **Guide**
Offshore & Shipbuilding

Offshore & Shipbuilding Magazine

KORSHIP

Tel: +82-2-2168-8898 Fax: +82-2-6442-2168

www.**korship**.co.kr

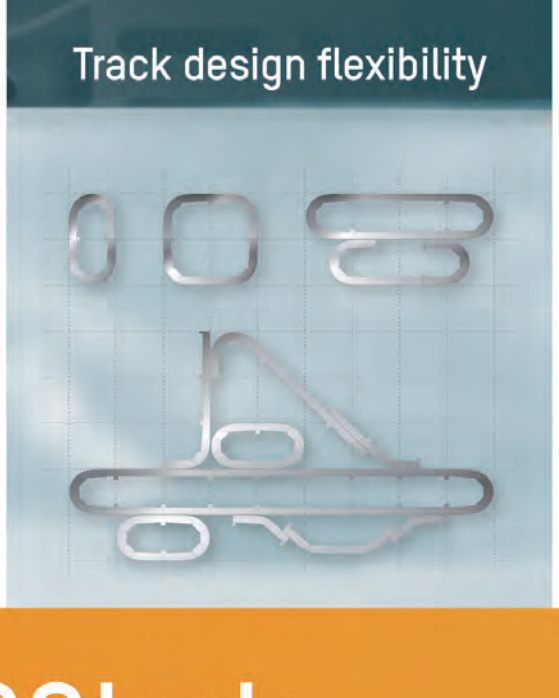

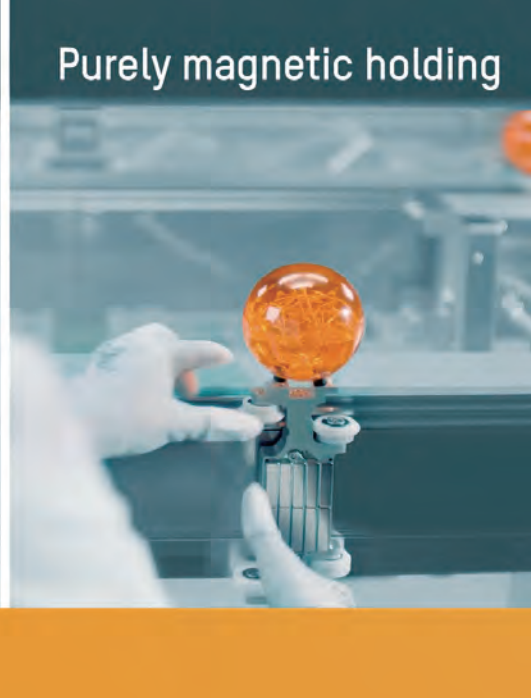

ACOPOStrak

Ultimate Production effectiveness

B&R Korea
경기도 안양시 동안구 평촌대로 212번길 55 대고빌딩 11층 tel. 031-476-4766 fax. 031-476-4767

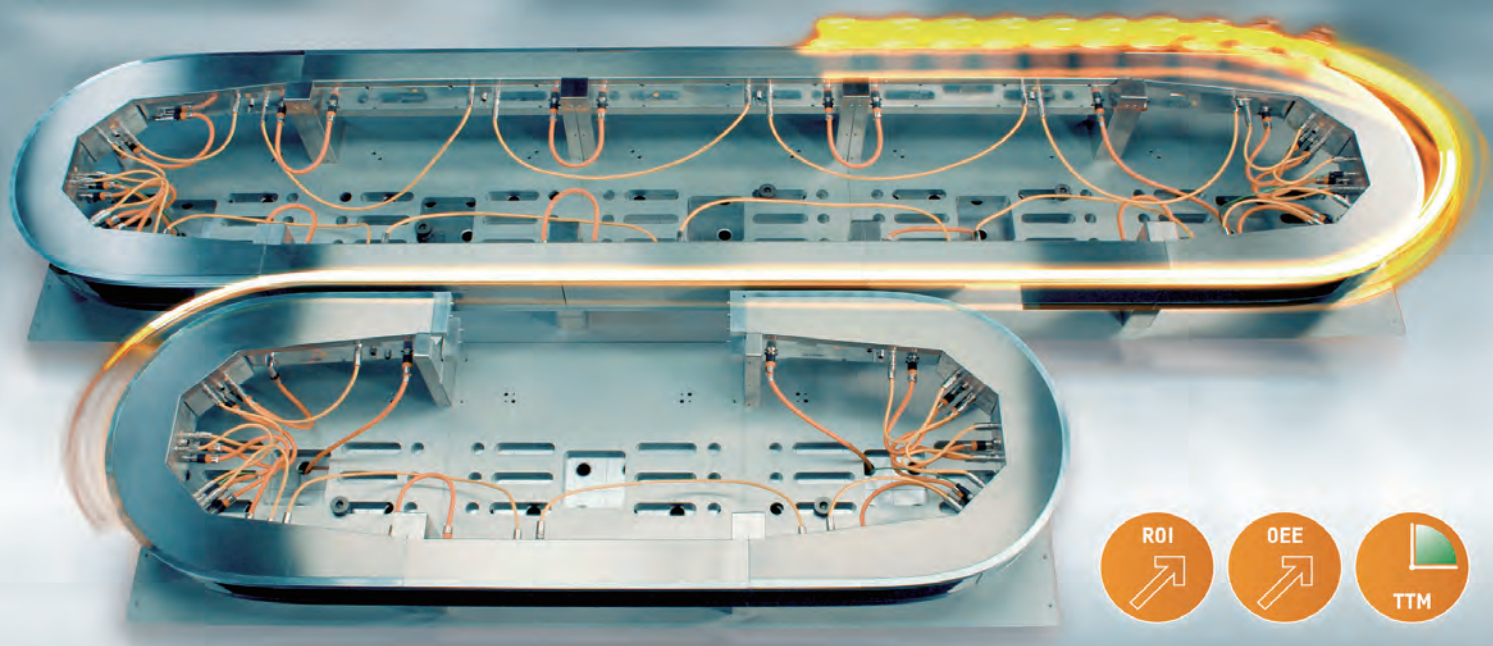

Enabling the adaptive machine.
Like no other transport system.

ETHERNET POWERLINK
open SAFETY
OPC Unified Architecture

PERFECTION IN AUTOMATION
A MEMBER OF THE ABB GROUP

B&R

Measurement made easy

Quickly Locate Natural Gas Leaks Anywhere

LGR 분석기는 Off-Axis ICOS라고 불리는 고유한 레이저 흡수 기술을 이용하여 각종 산업군의 Quality assurance, Process control, 환경안전, 유독성의 불순물 검출 등 타 레이저 분석기로는 따라올 수 없는 측정 능력을 보여줍니다. 사용하기 쉽고, Field Calibration이 필요없기 때문에 최소한의 현장 정비만 요구하므로 유지보수에 드는 비용또한 절감 됩니다. ABB LGR 제품의 경우 광학 정렬부분에서의 뛰어난 안정성을 보유하고 있기 때문에 간편하게 현장 서비스가 가능하고 또한 타 레이저 분석기와는 달리 이동 측정이 가능한 포터블 장비를 보유하고 있습니다. 당사 홈페이지에서 추가 정보를 더 보실 수 있습니다. **abb.com/analytical**

ABB 코리아
Tel. 02-6288-9087
Fax. 02-6288-9096
E-mail: marketing.inst@kr.abb.com

Monthly Korship, Korea's only Offshore & Shipbuilding monthly magazine

Monthly Korship keeps readers up to date with the latest news on Offshore & Shipbuilding industry and various companies swiftly. Korea, a small country on the planet, is leading the world's Offshore & Shipbuilding industry, powered by its economic growth.

This small but impactful Monthly Korship which is published in Korea, the world's largest Offshore & Shipbuilding country, will help keep your pulse on the Offshore & Shipbuilding industry around the globe.

Seoul Office

TEL : +82-2-2168-8898

FAX : +82-2-6442-2168

www.korship.co.kr

Offshore & Shipbuilding Magazine

KORSHIP

KROHNE

measure

정직한 유량계

the facts

Mass Flowmeter with Entrained Gas Management (EGM) Technology

OPTIMASS 6400

- Save money with OPTIMASS
- -200°C~+400°C and up to 200bar
- Easy installation

great partnership

크로네한국지사 | http://www.krohne.co.kr
Tel: 82-2-782-1900

서울 영등포구 여의도동 43 미원빌딩 508호 / korea.sales@krohne.com
부산마린센터 / 여수지부 / 울산지부

FLUENTA SEIKO

선박의 안전과 성능,
넥상스극동 케이블에서 시작됩니다.

Photos credits : © Corbis.

SHIPLINK®

안전하고 에너지 효율적인 선박용 케이블 솔루션

SHIPLINK는 가장 까다로운 국제 표준에 부합하는 에너지 및 통신 관련 전 케이블 제품군을 제공합니다. 넥상스극동의 솔루션은 고객의 요구에 최적화되었으며, 안전과 신뢰성, 그리고 품질 향상을 위해 지속적인 혁신을 이루어내고 있습니다. 넥상스극동은 화재에 안전하며 주변 환경과 특성에 맞는 제품과 솔루션으로 고객의 가치 창출에 기여합니다.

www.nexans.co.kr – contact.kr@nexans.com

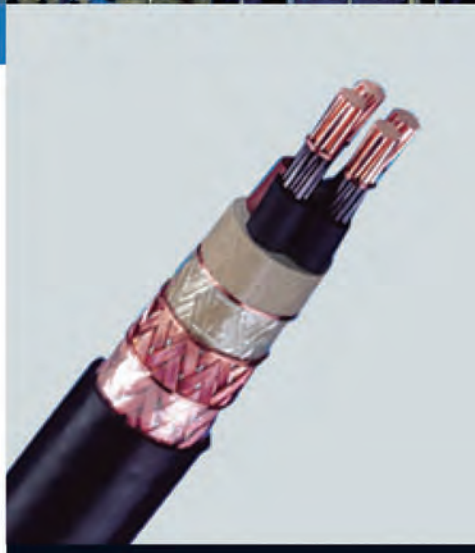

Nexans
BRINGS ENERGY TO LIFE

(주)하이트롤과 함께하는 Oil & Gas Companies

Cameron ExxonMobil Chevron TOTAL bp

Cone Meter

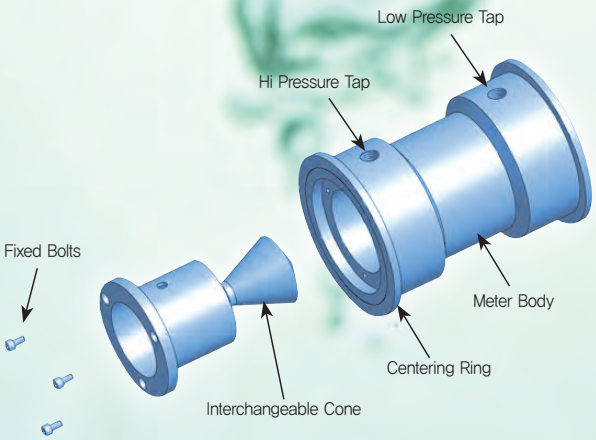

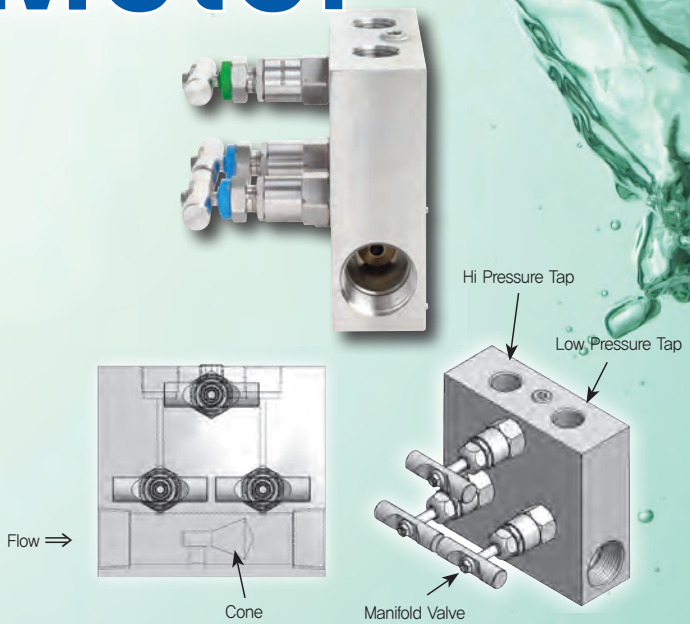

HFV-WM (Wafer type Cone Meter)　　**IVCM** (Integral Valve Cone Meter)

DP HiCone Meter

DP HiCone Meter는 일반적인 차압유량계의 일종이며 차압유량계와 같은 물리적 원리에 따라 유량을 측정합니다. 조임부 역할을 하는 Cone은 Meter body 중앙에 위치하여 유체의 흐름에 따라 유속을 증가시키고 차압을 발생시킵니다. 두 개의 검출 Tap은 High 와 Low pressure를 DP 전송기로 보내 유량을 지시합니다.

70 % 전단 3D 후단 1D의 짧은 직관부를 가짐에 따라 플랜트 건설에 최대 70 %까지 원가를 절감하는 효과를 가집니다. (미국 CEESI에서 API 22.2 TESTING)

±8 % Cone Meter는 제조공정상의 사소하게 보이는 차이에도 교정하지 않으면 최대 ±8 % 의 오차가 발생할 수 있습니다. 정확도 ±0.5~1 % 수준의 정밀한 유량측정을 위해서는 반드시 교정을 해야 합니다. (미국 CEESI에서 발표한 내용중)

하이트롤에서 생산되는 Cone Meter는 **ISO 17025 국제공인 교정시스템**에 의해 교정하며 ±0.5 %의 정확도를 가집니다.

HFV-WM

HFV-WM은 Meter body의 교체 없이 Cone을 교체하여 유량 범위를 변경할 수 있으며, 과도한 유속 또는 슬러그 뭉치의 충격으로 인한 Cone의 변형에 쉽게 교체 사용할 수 있는 특징을 가지고 있다. 또한, Wafer형태로 설치가 용이하고 모든 구성품이 정밀 기계가공되어 측정정확도가 우수하며, 용접부가 없어 압력부의 건전성이 확보 되었다.

(특 허 : 제 10-0915088호)

IVCM

IVCM은 차압식 유량계의 필연적 구성품인Manifold Valve를 Meter body와 일체형으로 제작하여 공정시 발생할수 있는 연결부의Leak를 최소화 하고, 설치시 공사 비용 및 시간을 줄이는 장점을 가진다.

(특 허 : 제 10-0915089호)

HITROL CO., LTD.

FCC CO., LTD.
FLOW CALIBRATION CENTER

유체 유량(ISO 17025) 국제 교정기관

(주)하이트롤 본사 · 공장 · 연구소
경기도 파주시 조리읍 팔학골길 141
TEL : (031) 950-9700　FAX : (031) 943-0878/5600
http:// www.hitrol.com　E-mail : hitrol@hitrol.com

(주)에프씨씨
TEL : (031) 950-9752　FAX : (031) 950-9796
E-mail : fcc@hitrol.com

KORSHIP | Shipbuilding Offshore Oil & Gas Offshore wind

Contents

10 Business News

Feature Story

18 Korea's three domestic shipbuilding heavyweights losing ground in offshore plant sector
- Fierce competition from latecomers such as Chinese and Singaporean companies

Issue

22 ABB Ability™ lands major deal for nine heavy lift vessels
23 Bolidt gets a warm reception from polar cruise operators
24 FUELSAVE introduces fuel consumption and emissions abatement game-changer
26 Emerson Study Reveals $7 Billion Profit Potential
27 Siemens' extended Model Based Systems Engineering solution 'Innovation'
28 Alfa Laval PureSOx connectivity on container vessels
30 Coldharbour targets Greek market as BW demand picks up
32 (국문) 대우조선해양, 3조원 규모 육상 원유생산 플랜트 첫 모듈 출항
33 (국문) 연간 최대 70억 달러의 수익향상
34 (국문) 지멘스, 모델 기반 시스템 엔지니어링 솔루션 확장

Technology

36 Offshore performance permutations
- Wärtsilä Corporation

Special Focus

40 Maritime gets with the program on cyber security
- Inmarsat

Product Review

44 Standardized piston accumulators with worldwide flexibility
- Bosch Rexroth

46 (국문) 유연성이 우수한 표준화된 피스톤 축압기
– 보쉬렉스로스

48 New Order

51 The Shipbuilding Marketshare

52 Korea Shipbuilding Orders

54 Offshore Plant Orders

56 Major Performance Gallery

Eco-friendly LNG carriers pulling the shipbuilding industry out of recession!

New Product

60 New Simrad V3100 Class B AIS
- Navico Inc.
61 SEA-Mate® BOB Technology
- Maersk Fluid Technology
62 Pressure Gauge Portfolio to Help Plants Improve Reliability
- Emerson Automation Solutions

63 솔리드 엣지 2019 버전
– 지멘스 PLM 소프트웨어

Advertisers Index

INTERPEEN ····· cover2
Offshore & Shipbuilding Guide ····· cover3
B&R ····· cover4
ABB ····· 1
Korship ····· 2
Krohne ····· 3
Nexans ····· 4
HITROL Co., Ltd ····· 5
INMEX China ····· 7
Hanben High Tech ····· 9
Kumsan M&E ····· 31
Kilwoo Trading ····· 35
Automa ····· 43
Konics ····· 50

INMEX CHINA

5 – 7 December 2018
Poly World Trade Center
Guangzhou, China

The 8th Edition of the

Leading & Definitive International Maritime Expo

in the Pearl River Delta Region, where the Maritime Community Converge

BOOK YOUR STAND TODAY TO SECURE PRIME LOCATION!

Violet Yong
Exhibition Director
+65 6411 7709
violet.yong@informa.com

Eileen Quek
Assistant Project Manager
+65 6411 7721
eileen.quek@informa.com

Another Quality Event by:
informa exhibitions

www.maritimeshows.com/china

Mission Statement

Korship helps not only to share informations and technologies of shipbuilding & offshore industry between users and potential suppliers but also introduce subscribers up-to-date shipbuilding & offshore related technologies and informations to become a shipbuilding & offshore industry technical journal.

Korship puts advertising domestic companies in touch with abroad buyers and tries to contribute development and growth of domestic shipbuilding & offshore industries by introducing world's new technologies, news, companies and products to superintendents, engineers, Korea branch of abroad companies, domestic shipbuilding & offshore companies and all related companies.

Technology

World's up-to-date indispensible informations of shipbuilding & offshore companies, products and system technology described to help people who engage in the industry.

Special Focus

Provide articles deeply focusing on latest shipbuilding & offshore industry technologies, logistics and port etc.

Company & Comments

Introduce latest tendency and related news of industry through company interview.

Product

New shipbuilding & offshore industry products overview

Business News

Issues and news articles from global shipbuilding & offshore companies and organizations

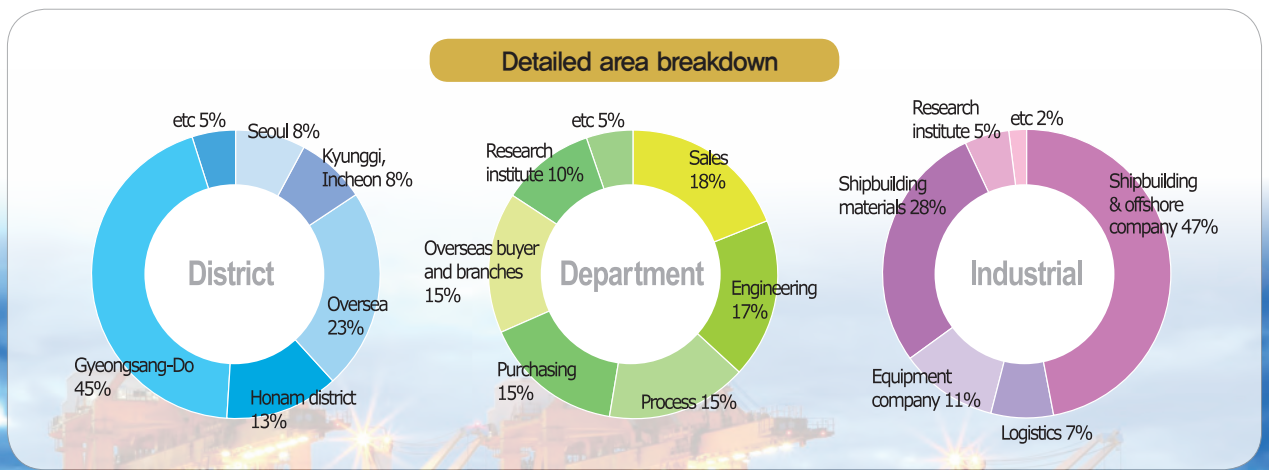

최고의 나노기술 아크릴계 수성 나노페인트

나노팜

아크릴계 수성 도료에서는 실현할 수 없었던 꿈!
(완전 수성 일체형 아크릴 에멀젼 페인트)

친환경 나노팜 방오도료
Anti-Pollution

해양 부유물 부착을 방지하여 선박의 운항효율을 증대시킬 뿐만 아니라 선박의 연료 소모량을 줄임으로써 이산화탄소 배출량을 감축하는 탁월한 효과가 있습니다.

나노팜 도료만의 탁월한 장점

- **친환경 수용성 도료**(유기, 유해물질 불포함)
- **강한 접착력**(콘크리트, 목재, 금속, 염화불소, 수지, 섬유 등)
- **다양한 용도**(방오, 방청, 선저방조, 내후성, 내열, 차열)
- **취급이 용이한 "완전수성 액상"**(솔, 롤러, 건등 시공 가능)
- 알루미늄, 스텐, 구리 등에도 사용가능

취급도료 | 수성 방수 도료 | 수성 차열 도료 | 수성 단열 도료 | 수성 절연 도료 | 수성 내열 도료 | 특수 발열 시트 |

제조원 ナノファーム株式会社
長野県駒ヶ根市赤穂11476番地23
【お問い合わせ】電話 0265-98-0621 FAX 0265-98-0622
メールinfo@nano-farm.co.jp
【ホームページ】http://www.nano-farm.co.jp/

한국총판 H2C (주)에이치투 H2 CORPORATION | 서울 서초구 서초대로 48길 89-4 UH빌딩 501호 TEL. 02. **501-1589** / FAX. 02. 501-2554

대리점 HB 한벤하이테크 HAN BEN HIGH TECH | 서울시 마포구 모래내로1길 3 한두빌딩 307호 TEL. 02. **303-0816** / FAX. 02. 303-0814

Hexagon launches HxGN SDx™, an asset lifecycle information management solution

Hexagon AB, a global leader in digital solutions, announced HxGN SDx™, a modular, cloud-based asset lifecycle information management (ALIM) solution that optimises efficiency, improves decision-making, and ensures safety throughout the entire lifecycle of an industrial facilities within the power, oil and gas industries. SDx is one of the many innovations being showcased this week at HxGN LIVE 2018, Hexagon's annual digital technology conference.

SDx is a data-centric SaaS solution that creates and maintains the "digital twin" of an industrial facility. SDx leverages the data within the digital twin to provide value-based work processes covering the complete facility lifecycle - improving project and operational efficiency while reducing risk.

"Customers are turning to Hexagon to realise the benefits of digital transformation. SDx is the solution upon which customers can make that happen, creating and managing the ever-evolving digital twin where both engineering data and documentation are created, maintained, and viewed throughout the facility lifecycle," said Ola Rollén, Hexagon President and CEO. "The result is simple - universal access to trustworthy information."

SDx includes four independent, integrated modules - Projects, Operations, Construction, and Completions - that address an industrial facility's major lifecycle stages. Each module provides work processes, roles, and content tailored to address a specific lifecycle phase, along with a comprehensive set of capabilities and additional options that can be licensed as needed.

The paint that launched 1000 ships

Hempel has applied Hempaguard®, its award-winning fouling defence coating, to more than 1000 ships. The one thousandth full-vessel coating was achieved in April.

The unrivalled fuel-saving properties of Hempaguard means that, collectively, the owners of these 1000 vessels have reduced their annual bunker bill by more than USD 400 million. This corresponds to a reduction in CO_2 emissions of more than three million tonnes every year.

After just five and a half years on the market the high-performance fouling defence coating has surpassed every expectation. Hempaguard is suitable for, and has been applied to, all vessel types.

Hempel's Global Product Manager, Henrik Dyrholm, said "Reaching this significant number of full vessel applications for Hempaguard in such a short time-period is a true testament to the value-added delivered by this innovative product. We have proven that Hempaguard delivers up to six percent fuel savings and retains its effectiveness during extended idle periods of up to 120 days."

He added "At Hempel, we pride ourselves on our investment in R&D and creating customer focused innovative products and services. Customer feedback has been unequivocally positive with shipowners realising significant returns on investment from Hempaguard."

Driving the success of Hempa guard is Hempel's market-leading Actiguard® technology. This combines a smooth silicone coating with the consistent release of limited biocides through a hydrogel layer.

This unique technology was five years in development and was launched in 2013 against a backdrop of tightening environmental regulations and an increasing push to reduce CO_2 emissions. Hempaguard is the first Hempel product to use this technology and based on this, Hempel was the first company to offer a performance satisfaction guarantee.

Five years on, the industry continues to seek enhanced environmental performance as well as optimum efficiencies. Hempaguard is a tried, tested and proven solution and its application to 1000 vessels speaks volumes. Upgrading the entire world fleet to Hempaguard X7 would, in theory, save the industry USD 12 billion (at current bunker prices) and reduce global CO_2 emissions by close to 95 million tonnes annually.

ABB to improve Edda Fides floating hotel safety with leading digital technology

ABB has won a contract to supply an innovative ABB Ability™ Marine Advisory System – OCTOPUS marine software for one of the world's most advanced floating hotel vessels for offshore operation.

The 600-person accommodation vessel Edda Fides, operated by Edda Accommodation, will now be able to integrate real-time weather forecasts with ABB Ability™ Marine Advisory System - OCTOPUS, a digital solution that helps vessel owners gather and analyze data to optimize operations.

OCTOPUS will provide advice on how to operate the gangway to ensure safe crew and offshore personnel transfers between two free-floating vessels. The system will calculate hydrodynamic parameters and their impact on vessel responses, as well as give insights into maximizing operational uptime within critical motion and acceleration limits.

"We are delighted to have concluded a contract for ABB Marine & Ports' OCTOPUS solution," said Johan Rokstad, CEO of Edda Accommodation. "ABB's digital gangway motion monitoring system is a significant upgrade for Edda Fides, which we believe will raise vessel efficiency, improve crew safety, and provide added value to our customers."

In addition to enhancing the crew and passenger transfer safety, OCTOPUS will optimize the overall operational performance of Edda Fides. Alarms will provide onboard warnings if pre-set limits are exceeded, while the OCTOPUS Fleet Portal will enable the shoreside operating staff to monitor vessel performance indicators.

"The contract reflects ABB Marine & Ports' growing involvement in the offshore vessel segment and is the latest manifestation of our 'Electric. Digital. Connected.' strategy for the maritime industry," said Juha Koskela, Managing Director, ABB Marine & Ports. "The OCTOPUS system is scalable and can be extended to provide a range of additional optimization modules for offshore contractors, owners and charterers."

As floating accommodation units become integral components of complex deepwater offshore projects in harsh environments, safe gangway operations are critical to ensuring the highest standards and maximizing vessel uptime. ABB won its first order for an OCTOPUS gangway monitoring and forecasting system in 2013, when Poseidon Maritime Services placed a contract for a system installation on board its accommodation vessel Aquarius Brasil. This vessel is currently operating in the deep and often challenging waters of Brazil's Campos Basin.

Chevron Shipping Company LLC selects C-MAP to supply smart shipping solutions

Following a competitive tender, Chevron Shipping Company (CSC) has selected C-MAP, the leading provider of commercial marine charting and cloud-based software solutions for fleet management and route optimization, to provide smart shipping solutions.

CSC will deploy C-MAP's Integrated Maritime Suite (IMS), a powerful onboard platform that employs evolutionary algorithms and customized ship performance models to deliver unmatched voyage optimization. C-MAP's IMS enables users to optimize routes to get the fastest arrival times, while minimizing costs and bunker consumption and maximizing safety.

CSC will also gain full visibility of their fleet's performance via C-MAP's FleetManager. The web-based solution provides analytics to optimize efficiency and improve operational and strategic decision-making. C-MAP's Commercial Services team will provide shore-based routing and voyage optimization services, as well as technical support and training. In addition, ADMIRALTY AVCS Electronic Navigation Charts and Digital Publications, C-MAP Pro+ charts, and C-MAP UpdateWizard offer worldwide chart coverage.

"We are delighted that CSC has chosen C-MAP to provide market-leading voyage optimization, fleet management solutions, and world-wide charts," said Sean Fernback, C-MAP's CEO. "We are confident C-MAP offers unmatched insight and analysis, as well as chart coverage, to enable users to improve fleet operational efficiency and effectiveness."

Oil-to-Water Conversion Success for Great Lakes Bulkers

The oil-to-water lubricated tailshaft conversion Thordon Bearings carried out last year to the 26,260 DWT Great Lakes Fleet-managed bulk carrier SS John G. Munson has successfully completed its first season as a diesel-powered ship.

The shaft conversion of the 1952-built self-unloader formed a key part of the mammoth 12-month power conversion project completed last year by Fincantieri's Bay Shipbuilding yard, in Sturgeon Bay, Wisconsin, U.S.A.

The vessel's steam propulsion plant was replaced with an energy efficient medium-speed diesel arrangement. Major works also included the removal and replacement of the vessels' tailshaft, stern tube, propeller and hub. Thordon Bearings' supplied its COMPAC water lubricated propeller shaft bearings, a Water Quality Package, which conditions the lubricating water, and shaft protection system ThorShield.

Mechanical Supply Inc. and Belthor Systems, members of Thordon's Distributor Network, worked closely with Great Lakes Fleet on the detailed design, while Avalon Marine, another Thordon Distributor, was instrumental in working with classification society ABS to trial COMPAC under its notation for extended shaft withdrawal.

SS John G. Munson became the first ABS-classed vessel with a water-lubricated propeller shaft arrangement to operate under its TCM (Tailshaft Condition Monitoring) notation.

Commenting on the success of the conversion, Thordon's Regional Manager – Americas, Scott Groves, said "September 2017 sea trials confirmed the MV John G. Munson is consuming considerably less fuel than it was as a steam ship, reducing emissions dramatically. The water lubricated propeller shaft arrangement adds to these cost savings and further mitigates against any risk of tailshaft pollution."

"As steam power plants can use 30 to 50% more fuel than comparable diesel engines, the shipowner's decision to convert the Munson under the U.S EPA's Steamship Repower Incentive Program has paid dividends. As a motorship, the owner can now extend the life of this historic vessel for decades to come, without detriment to the environment in which it operates."

Thordon Bearings' Director of Marketing and Customer Services, Craig Carter, added "There are a number of steam-driven bulk carriers that have been earmarked as potential candidates for power conversions, some of which, like the Munson, have already been converted to more energy and environmentally-efficient means of propulsion."

Van Oord and Shell Marine sign five-year partnership

Global maritime contractor Van Oord has signed a five-year partnership agreement with Shell Marine covering the lubrication needs for its entire fleet of vessels. The all-inclusive agreement was acknowledged in a special ceremony, staged at the Van Oord headquarters in Rotterdam, where Jaap de Jong signed on behalf of Van Oord and Inbar van de Burg reciprocated on behalf of Shell Marine. The final deal evolved to reflect Shell Marine's commitments to time-critical delivery of lubricants for use on Van Oord vessels worldwide, while minimising cost overheads and offering continuous logistics and technical support.

"We are involved in dredging, oil & gas infrastructure and offshore wind projects around the world," said Jaap de Jong, Staff Director Ship Management Department at Van Oord. "We must have 100% reliability and optimum efficiency wherever our vessels are operating, and we must also be able to demonstrate the sustainability of our operations to meet our own goals of corporate social responsibility and those of the authorities we work with"

Van Oord will take advantage of Shell Marine's LubeMonitor 4T programme to minimize lubrication feed rates and oil consumption. Shell Marine's global team of field-based engineers will also be deployed to support the Van Oord vessels, as

required. The team assists in lubrication surveys, vessel assessments and in-depth technical and application support, whilst focusing on value creation for its customers, such as optimising energy efficiency and upholding the sustainable supply chain.

Shell Marine's unique Marine Integrated Lubrication and Expert Solutions (MILES) proposition seeks to optimise customer benefits by bundling the supply of high-performance lubricants together with an array of technical services, logistics and delivery options tailored to the client's requirements.

Marcus Schaerer, Shell Marine Global Marketing Manager, said "Shell Marine is gaining global recognition for its MILES programme, with uptake accelerating around the world. Van Oord is a long-standing Shell Marine customer. Its five-year commitment marks a new step-forward in our relationship. It also underlines the value and reassurance that MILES can provide maritime businesses involved in complex projects that offer little leeway for any disruption to vessel uptime."

Bureau Veritas issues range of approvals for GTT's new gas containment systems & LNG technology applications

Bureau Veritas has issued a broad swathe of approvals to GTT (Gaztransport & Technigaz), expert in membrane containment systems and LNG technology applications.

Bureau Veritas experts have been working with GTT to approve two new containment systems: the Mark III Flex+, an evolution of the Mark III® but with a lower boil-off rate (BOR), and the GTT MARS™, a containment system developed for LPG carriers that is adaptable to any size of tank or ship.

Approval in Principle (AiP) has been provided for a 6,500 cbm bunker barge (jointly developed between DSEC and GTT) and the AiP for the design of an 180,000 cbm LNG carrier is being finalized. Both demonstrate GTT's move beyond containment technology systems to full ship design.

Additional AiPs have been granted for:

- A solution for vapour pocket management allowing LNG carriers, in compliance with the revised IGC Code, to operate with an increased filling limit (above 98%).
- GTT's NO96 pressurization system evolution to provide enhanced maintenance flexibility and safety.
- Reduced cooling down features of both the NO96 and Mark III® systems to improve cargo operations.

Workers inspecting the tank of an LNG carrier equipped with GTT Mark technology

Matthieu de Tugny, COO, Bureau Veritas Marine & Offshore, said "These approvals are helping GTT expand the range and depth of their technologies. The increasing sophistication of containment systems and expansion of their application - as in CMA CGM's breakthrough order for large containerships with membrane tanks - is driving the adoption and development of gas transportation and LNG as a marine fuel as well supporting the marine gas trades."

ClassNK releases Guidelines for Concept Design of Automated Operation/Autonomous Operation of ships

ClassNK has released its Guidelines for Concept Design of Automated Operation/ Autonomous Operation of ships. These guidelines incorporate basic elements on concept design safety for automated ship operation systems.

In the automobile field, research and development on automated driving systems is being conducted worldwide. In the maritime industry, efforts towards the development of automated operation systems for ships are being made aiming to improve navigation safety, working conditions onboard, ship operation, and more. This development of automated operation systems is expected to be achieved step by step for merchant ships in order to support their crews, except in some cases.

As the onboard operations and duties performed by ships' crews vary widely, design developments for automated ship operation are expected to be carried out under various conditions and concepts. It is essential to clarify the targeted operations/ duties that would be automated, distinguish the division of roles between the crew (humans) and the automated operation systems (machines), and establish common understanding between everyone involved in the operation of the ship.

In light of the above, ClassNK developed these Guidelines with safety in mind in order to address the elements which must be considered in the concept design of automated ship operation systems. As there will likely be a variety of different design developments when it comes to the automated operation of ships, the Guidelines have been tentatively published as a "provisional version" which will be finalized through proper review and revision after being applied for a certain period of time. ClassNK also plans to develop further guidelines for various stages on the automated operation of ships from development of design to actual operation.

New Multiple Engine Display from Oceanic Systems

Oceanic Systems has recently added another groundbreaking engine display to the company's portfolio, the 4161 Multiple Engine Display. Designed as part of Oceanic's iconic BlackGlass range, these engine displays are chosen for their advanced functionality and elegant appearance. With sunlight readable and dimmable colour graphics, these displays add class when installed in the vessel's bridge.

The 4161 Multiple Engine Display shows data for up to four engines and is the latest development in a range of Oceanic Systems engine displays. These displays are the perfect alternative to origin al engine manufacturers' options of older style single unit displays.

Choosing the engine manufacturer to display is done by simply setting a switch on the rear of the unit. Currently supporting eight major engine brands, Oceanic Systems is increasing the capability to an outstanding 16 engine manufacturers for each inboard and outboard engines.

These displays understand and present engine manufacturer's error codes as they occur to ensure that they do not compromise the selected engine manufacturer's warranty - providing flexibility to installers, boat builders and owners alike.

"It's not just about the cutting edge design and engine brand compatibility. Fitting the new 4161 Multiple Engine Display, much like our existing 4166 Dual Engine Display, comes down to simple economics as well. We are enabling manufacturers to save as much as £ 7,500 per boat in installation costs, a concept which is naturally being met very positively from our resellers," said Bruce Coward, Managing Director.

Available in 19˝ wide format, the Oceanic Systems' Multiple Engine display has both J1939 and NMEA2000® built-in interfaces that display all the important engine data in real time. Displayed information includes up to four engines and four fuel tank levels, the current rudder/steering angle, GPS compass and local GPS time.

Oceanic Systems has already sold several hundred of their current Engine Display models worldwide, proving them to be the choice of many of the world's top motor yacht manufacturers who seek an upgraded design to complement the luxury interiors of the latest motor vessel models.

The inboard engine manufacturer compatibility options include Caterpillar, MAN, MTU, Volvo, Cummins, Yanmar.

ABS Classes Newly Converted LNG-fueled Ferry

ABS is pleased to confirm that the ABS-classed Spirit of British Columbia, one of two ferries that will use LNG as fuel, has finished conversion and is back in operation for BC Ferries of Canada.

"The conversion of these vessels to operate on LNG is an important milestone for BC Ferries and the region, supporting more efficient and environmentally-friendly transportation," said ABS Vice President for Global Gas Solutions Patrick Janssens. "With the increased pressure for environmental compliance, LNG as fuel is a practical option for many marine owners and operators."

The Spirit of British Columbia was the first to undergo conversion while its sister vessel, the Spirit of Vancouver Island, is expected to complete conversion during the spring of 2019. These vessels are the largest ships in the BC Ferries fleet with a capacity to carry 2,100 passengers and crew and 358 automobile equivalent. The conversion to LNG as fuel was completed at the Remontowa Ship Repair Yard S.A. in Gdansk, Poland.

"We are excited to welcome the Spirit of British Columbia back into our fleet and the environmental benefits and efficiency advantages that come with its conversion," said BC Ferries Vice President of Strategy and Community Engagement, Mark Wilson. "We worked closely with ABS who helped us navigate the technical compliance challenges of converting existing vessels to run on LNG and played a key role in bringing this project to fruition."

Recognizing the changing landscape and increased industry focus on gas, ABS launched its Global Gas Solutions team in 2013 to support industry in developing gas-related projects. The ABS Global Gas Solutions team provides industry leadership, offering guidance in liquefied natural gas (LNG) floating structures and systems, gas fuel systems and equipment, gas carriers, and regulatory and statutory requirements. ABS has extensive experience with the full scope of gas-related assets and has been the classification society of choice for some of the most advanced gas carriers in service.

Inmarsat signs collaboration agreement with Hellenic Space Agency

Inmarsat has signed a memorandum of understanding with the Hellenic Space Agency (HSA) to allow greater collaboration on research and potential technology development.

The agreement was signed today at the international shipping event Posidonia 2018 in Athens by Inmarsat's Maritime President Ronald Spithout and Christodoulos Proto papas, Chairman of the Hellenic Space Agency.

The HSA is mandated by the Hellenic Republic to promote space and technology and foster research activities related to advance scientific engineering within the framework of Greek government policy.

The MOU will specifically look at collaboration on research and development opportunities in space and ground segment technologies, as well as exchange of data.

Additionally, the two organisations will look at the role of satellite within the Internet of Things (IoT) and the potential for strategic research studies on future maritime software technologies and broader space policy. Finally, there is also an opportunity for secondments between the two organisations.

Ronald Spithout, Inmarsat Maritime President, said "This agreement underlines an already, strong and collaborative partnership between Inmarsat and the Hellenic Space Agency. We look forward to this further developing in the years to come and seeing the benefits of projects which will help shape our industry."

Mr Protopapas of the Hellenic Space Agency (HSA), said "Inmarsat is one of the most respected global space businesses and it is hugely exciting that this memorandum will pave the way for greater cooperation with us on a number of levels. Whether it is an exchange of skills, data or people, we will work on initiatives which will increase knowledge and understanding of the impact of satellite technology."

슈나이더 일렉트릭 익산공장, EOCR 누적 생산 1,600만개 달성

슈나이더 일렉트릭이 'EOCR(스마트 모터 보호 계전기)'의 1,600만개 누적 생산을 달성했다. 지난 6월 15일 진행된 기념식에는 슈나이더 일렉트릭 글로벌 마케팅 에릭 리제(Eric Liger) 수석 부사장, 슈나이더 일렉트릭 코리아 이창근 본부장, 슈나이더 일렉트릭 익산 공장 직원 등이 참석해 생산 달성을 축하했다.

슈나이더 일렉트릭의 'EOCR'은 전세계 200여개의 슈나이더 일렉트릭의 제조 생산 공장 중 하나인 익산 공장에서 1983년부터 생산된 주요 제품이다. 'EOCR'은 AC 모터, DC 모터 및 3상 또는 단상에서의 전압 보호 기기로 과전류 및 결상 등으로부터 모든 기계를 보호하고, 유지 보수가 용이하다. 이는 제조 공장뿐만 아니라 자동차, 가스, 상하수도, 공항, 철도 분야 및 빌딩에서 적용될 수 있다. 최근에는 스마트 모터 보호 계전기인 'EOCR-iSEM'도 출시됐다. 이 제품은 온도·습도 센서가 내장돼 다양한 환경 및 상태 감시가 가능하며, 이더넷 통신도 적용돼 실시간으로 데이터를 계측하여 효율적인 토털 모터 관리 솔루션을 제공한다.

익산 공장에서 생산된 'EOCR'은 슈나이더 일렉트릭의 글로벌 네트워크를 통해 전세계 20여개 국가에 수출되고 있으며, 연간 100 만개가 생산되는 등 매해 지속적으로 신장되고 있다.

익산 공장은 ISO 9001, ISO 14001, ISO 50001, OHSAS 18001 인증을 획득하여 우수한 제조 공정 및 생산품질 경영 시스템을 갖추고 있다. 또한, 슈나이더 일렉트릭의 자체 제조생산공정 및 물류 시스템 평가 심사 기준인 'SPS(Schneider Performance System)' 평가에서도 생산 및 품질 우수성을 인정 받았다.

슈나이더 일렉트릭 관계자는 "슈나이더 일렉트릭은 안전하고 효율성 높은 모터 보호 계전기를 출시해온 이래로 R&D를 거쳐 사물인터넷(IoT) 기술을 적용해 더욱 높은 품질의 제품을 생산해왔다. 이번 1,600만개 누적 생산 달성 기록은 익산 공장의 모든 직원들이 힘을 합해 이뤄낸 결과로, 향후 익산 공장의 지속가능성과 생산성 향상을 위해 최선을 다할 것"이라고 전했다.

현대미포조선, LEG 운반선 2척 동시 명명

현대미포조선은 지난 6월 12일 그리스 엘레손(ELETSON)의 12,000 cbm급 LEG운반선인 2척에 대한 동시 명명식을 가졌다. 이날 행사에는 현대미포조선 한영석 사장 및 선주·선급 관계자 등 많은 내외빈이 참석해 새로운 선박의 탄생을 축하하고 안전항해를 기원했다.

길이 147.0m, 너비 22.6m, 높이 12.6m의 제원을 갖춘 이들 선박은 선주사에 의해 '키시라(KITHIRA)'호와 '안티키시라(ANTIKITHIRA)'호로 각각 이름이 붙여졌다.

INTTRA, 사상 최대 거래량 달성

세계 최대의 중립 전자 거래 플랫폼으로서 해양운송업계의 중심에서 소프트웨어 및 정보를 제공하고 있는 INTTRA는 2018년 5월에 해당 플랫폼에서 컨테이너 예약 또는 선적 지시요청으로 4백만 건 이상이라는 사상 최대 거래량을 기록했다고 발표했다. 17년 역사상 처음으로 한 달이라는 기간 동안 400만 건을 초과한 것이다.

이러한 기록적인 물량은 INTTRA의 비즈니스에서의 지속적인 강세를 보여 주며, 화주 및 운송 업체가 컨테이너 화물 공급망 전반에서 효율성, 가시성 및 연결성을 향상시키기 위해 점점 더 디지털화를 채택함에 따라 고객에게 전달되는 가치가 어떠한지 잘 보여주는 것이다.

INTTRA의 존 페이(John Fay) CEO는 "INTTRA는 계속적으로 강력한 추진력을 나타내고 있다"면서 "거래가 증가하고 고객이 우리 플랫폼에 높은 비율로 참여하고 있다. INTTRA는 업계를 선도하는 네트워크 및 제품을 사용하여 업계를 디지털화하고 앞으로도 우리 팀의 오랜 전문성을 활용해 표준화 및 혁신의 혜택을 고객과 업계에 제공할 것"이라고 말했다.

올해 5월의 기록적인 결과는 회사가 해당 플랫폼에서 4,500만 건의 컨테이너 주문을 처리했던 2017년의 강한 성장을 뒤따른 것이다.

한국선급 컨소시엄, 국내 선박평형수 처리설비 USCG 형식 승인 취득

한국선급은 지난 6월 5일 한국선급이 이끄는 컨소시엄을 통해 테크로스의 선박평형수 처리설비(BWMS, Ballast Water Management System) 제품이 미국 정부의 형식승인을 취득했다고 밝혔다.

미국은 국제해사기구(IMO, International Maritime Organization)의 선박평형수 관리협약과 별도로 자국 법에 따라 미국 해안경비대(USCG, United States Coast Guard)로부터 승인받은 BWMS에 의해 관리된 선박 평형수만 해역에 배출할 수 있도록 규정하고 있어, 미국 항만에 입항하는 선박은 반드시 USCG의 형식승인을 취득한 BWMS 제품을 본선에 탑재해야 한다.

미국의 BWMS 형식승인 절차는 IMO보다 강화된 기준으로 제정되었기 때문에 USCG의 형식승인을 취득한 BWMS 업체 제품에 대한 고객들의 신뢰도가 높아 세계 BWMS 시장 선점에 있어 유리한 위치를 차지할 수 있다. 현재 테크로스를 포함하여 USCG로부터 형식승인을 받은 업체는 전 세계적으로 7개뿐이다.

한국선급은 지난 2년간 한국조선해양기자재연구원, 한국화학융합시험연구원, 해양생태기술연구소와 함께 컨소시엄을 꾸려 삼성중공업 및 테크로스 제품이 미국 형식승인을 받을 수 있도록 긴밀하게 협업했으며, 테크로스에 이어 조만간 USCG에서 삼성중공업 제품에 대한 형식승인 시험 보고서의 검토도 마무리할 것으로 보이며 후속 형식 승인 증서가 발급될 것으로 기대된다.

한국선급 관계자는 "한국선급이 이끄는 컨소시엄에서 시험한 BWMS 제품이 USCG로부터 형식승인을 받았다는 것은 미국 및 세계에 우리 선급 및 컨소시엄의 BWMS 시험 기술력을 인정받았다는 데 있어 큰 의미가 있다"라며, "한국선급은 앞으로도 기술력을 지속적으로 증진하여 국내 해사 산업계 동반 성장을 이끌 수 있도록 최선을 다하겠다"고 말했다.

LS전선, 인도네시아 합작 투자

LS전선은 지난 6월 18일 서울 여의도 주한 인도네시아 대사관에서 아르타 그라하 그룹(Artha Graha Network, 이하 AG그룹)과 합작법인 설립을 위한 계약을 체결했다. 이 자리에는 명노현 LS전선 대표, 판지 위나타 AG그룹 회장, 우마르 하디 주한 인도네시아 대사 등이 참석했다.

LS전선과 AG그룹은 총 4천만 달러(약 440억 원)를 투자, 올 7월 자카르타시 인근 64,000m²(19,360평)에 전력 케이블 공장을 착공하여 2019년 말 완공 예정이다. 인프라용 가공 전선과 건설, 플랜트 등에 사용되는 중저압 전선을 생산, 2025년 약 1억 달러의 매출을 기대하고 있다.

AG그룹은 1973년 설립되어 은행, 호텔, 건설/리조트 사업 등을 하는 인도네시아 10위권 대기업이다. LS전선의 글로벌 전선사업 역량과 AG그룹의 인도네시아 현지 사업 경험의 시너지가 기대된다.

인도네시아는 전력 인프라 구축과 건설 경기가 활발하여 아세안에서 전선 시장 규모가 가장 클 뿐만 아니라 매년 8% 이상 급성장하고 있다.

명노현 LS전선 대표는 "인도네시아는 경제가 급성장 하고 있는 매력적인 시장으로 지난 수년간 진출을 모색해 왔다"며, "작년 11월, 문재인 대통령이 한-인도네시아 비즈니스 포럼에서 '신남방정책'을 발표한 후 협상이 급물살을 탔다"고 밝혔다.

LS전선은 현지 진출을 통해 경쟁력을 확보하는 글로벌 거점 전략을 지속적으로 추진하고 있다. 이번 인도네시아 생산법인 설립으로, 베트남 전선 시장 1위인 LS전선아시아를 비롯, 중국과 인도, 미얀마 등 아시아에만 총 7개의 생산법인을 보유하게 되었다.

Korea's three domestic shipbuilding heavyweights losing ground in offshore plant sector

Fierce competition from latecomers such as Chinese and Singaporean companies

Korean shipbuilding industry is confronted with difficulty in wining new orders for offshore plants.

Chinese and Singaporean companies, which have made full-fledged entry into global offshore production facility market, are offering low prices, eroding the competitiveness of Korean shipyards. Previously, Korea's three domestic shipbuilding heavyweights, such as Hyundai Heavy Industries (HHI), Samsung Heavy Industries (SHI), Daewoo Shipbuilding & Marine Engineering (DSME), swept global orders for medium and large-scale production facilities. However, they have been losing ground to Chinese and Singaporean companies since last year.

New orders for offshore plants, which actually dried up from 2015 to late 2016, began to increase from last year on the back of strong demand for offshore production facilities. Particularly, Korea's three domestic shipbuilding heavyweights failed to receive any order among the newbuilding orders for 4 medium and large-scale production facilities which have been placed since the second half of last year. That is not a surprise, considering that the orders placed in Europe or the united States were received by shipyards in those regions previously. However, recent 2 cases of orders at Singaporean companies are considered to erode the leading position of Korea's three domestic shipbuilding heavyweights.

The shipbuilding industry is keeping a close eye on offshore plant sector in the era of high oil prices. Offshore plant sector enjoyed unprecedented boom underpinned by the surge in the demand for deep-sea oil field development amid sustained high oil prices after 2011. At that time, offshore plant was considered as the only growth engine for the stagnant shipbuilding industry in the grip of recession. Korea, which was trailed closely behind by China in the commercial vessel sector, could stay afloat with strong competitiveness in offshore plant sector. Since then, offshore plants began to be pointed out as the main culprit behind huge financial distress gripping the Korean shipyards in the face of the diminishing demand, cancellation of orders and delay in delivery amid plunge in international oil prices.

As oil prices rise, global oil giants are more likely to increase orders for offshore plants. Offshore plants serve as major source of revenue for the shipbuilding industry along with vessels. However, orders for offshore plants have almost dried up with international oil prices declining in the last 2 to 3 years.

Global shipbuilding industry is closely monitoring the trends of global oil industry and accelerating the efforts to win orders for offshore plants. Meanwhile, cautious approach has been taken by Korean shipbuilding industry which expe-

rienced deterioration of financial structure as a result of low-priced contracts in the midst of overheated competition during the hyper-boom of global offshore plant market in early 2000s. Global offshore plant market is witnessing ever-more fierce competition as competitors, such as shipyards in Singapore and China, are recently offering low prices.

Low-priced contracts and cutthroat competition

Korea's three domestic shipbuilding heavyweights which have dominated global offshore plant market are seeing an erosion of their leading position. They are losing ground to Chinese and Singaporean companies, the latecomers to the offshore production facility market, which are signing contracts at low prices to thicken their orderbooks. The hull for the Johan Castberg project, located in the North Sea, was awarded to a Singaporean company submitting the bid price 15~20% lower than the bid prices offered by Korea's three domestic shipbuilding heavyweights.

The international oil prices recently rose above USD 70 a barrel, creating favorable conditions for the rebound in offshore plant market. As a result, an increase in new orders for offshore plants is anticipated, along with the turnaround in the market, although new orders are unlikely to reach the level recorded in 2011, the year of boom in global offshore plant sector dominated by Korea's three domestic shipbuilding heavyweights. The reality bites hard. Competition with latecomers, such as China and Singapore, is unavoidable. Even if orders are received successfully, the profitability of offshore plants still remains unclear. In addition, Korea's three domestic shipbuilding heavyweights, which recorded deficits in the offshore plant market in the past, are reluctant to be involved in cutthroat competition.

Outstripped by latecomers

Korea's three domestic shipbuilding heavyweights have won a series of new orders since the beginning of this year, but have shown weak performance in offshore plant sector. According to the shipbuilding industry, Hyundai Heavy Industries (HHI) and Samsung Heavy Industries (SHI) were defeated by France's Technip FMC and China's COSCO consortium in the bid for KRW 1 trillion worth of order for FPSO for development of Tortue gas field in Africa, a project led by British Petroleum.

The failure of the bid is said to be attributable to weak price-competitiveness. The gas development project is a large-scale project valued at KRW 6 trillion, which involves placement of orders for 4 offshore plants, including FPSO and FLNG (Floating Liquefied Natural Gas).

HHI and SHI were also defeated by Aibel and Aker Solution-Kvaerner joint venture in the bid for offshore plant, ordered by Norway's state-run oil company Statoil, for Johan Svedrup project in the North Sea. Korea's three domestic shipbuilding heavyweights were beaten by Singapore-based Sembcorp

Marin in the bid for KRW 500 billion worth of offshore plant ordered by Statoil last year to build the FPSO necessary for Johan Castberg project.

Korea's three domestic shipbuilding heavyweights are seeing a plunge in new order intake. Among Korea's three domestic shipbuilding heavyweights, Hyundai Heavy Industries (HHI) and Daewoo Shipbuilding & Marine Engineering (DSME) have not added any offshore plant to their orderbooks since November 2014, except for Samsung Heavy Industries (SHI) which won orders for 2 offshore plants last year.

Concern about low-priced contracts

Korea shipbuilding industry is undergoing difficulties, such as retrenchment arising from severe deficits. If deficits start to grow again due to low-priced contracts in offshore plant sector, the culprit behind current financial distress of Korean shipyards, the efforts mad thus far for normalization of business will go down the drain.

However, the expectations for offshore plant orders are increasing as the international oil prices reach USD 80 per barrel. As the sanction has become more likely to be imposed in Iran by the United States, the international oil prices are skyrocketing. The price of Brent crude oil hit USD 80 per barrel in 3 years and 6 months since late 2014, and there is a mounting expectation for USD 100 per barrel.

Offshore plant orders are closely associated with international oil prices. Major domestic shipyards scrambled to win new orders for offshore plants when the international oil prices hovered above USD 100 per barrel until early 2014. Later, the plunge in international oil prices brought a crisis jeopardizing the business viability. Global oil giants, such as Chevron, are resuming the placement of orders as the international oil prices continue to rise.

Although the international oil prices continue the upward trend, there is also a concern about low-priced contracts which may result from fierce competition among domestic shipyards scrambling to thicken their orderbooks.

ABB Ability™ lands major deal for nine heavy lift vessels

ABB Ability™ Marine Advisory System – OCTOPUS marine software will map the safest and most efficient routes for a fleet of heavy lift vessels servicing the expansion of a giant oil field in Kazakhstan.

ABB has secured a series of contracts for nine heavy lift vessels transporting modules for the Tengiz oil field expansion by Tengizchevroil (TCO).

OCTOPUS will enhance the safety and efficiency of the heavy-lift vessels carrying out the transportation work by indicating the optimal route based on weather and forecasted vessel motions.

TCO has contracted China's biggest shipping company, COSCO SHIPPING Co. Ltd., to carry out the transportation work, which will see modules weighing up to 1,800 tons moved from fabrication yards in Korea and Europe to the transshipment ports in the Black and Baltic seas. From there, the modules will be further transported to western Kazakhstan.

COSCO SHIPPING Co. Ltd. has subcontracted part of the work to its partners – NYK Group, Chung Yang Shipping, Dongbang Transport Logistics, Hanjin Transportation and CJ Korea Express – which resulted in a string of new orders for OCTOPUS. As part of the delivery, ABB will also install sensors on each vessel to generate real-time roll and motion data for both the cargo and vessel. This information, accessible to officers on the bridge and support teams ashore, is critical to ensuring high levels of safety and cargo protection. As part of the implementation, ABB will, through its ABB Ability™ Platform, make defined data points available for the expansion project thro ugh Cloud-to-Cloud Integration, enab ling TCO to monitor specific KPIs and project progress.

"Together with our partners, we have been contracted to ensure the safe and timely delivery of project modules into Kazakhstan," said Marc Beerendonk, Chief Operating Officer, COSCO SHIPPING Heavy Transport.

"We already have considerable experience of using ABB's OCTOPUS software, as our own semi-submersible heavy lift fleet has used the system for a number of years. We look forward to taking this collaboration a step further and rolling out this highly effective technology across the heavy lift ships in the TCO transportation and logistics contract."

"The contract demonstrates once again that OCTOPUS has become the industry standard solution for predicting and measuring motions on semi-submersible heavy lift vessels," said Juha Koskela, Managing Director, ABB Marine & Ports. "One of the reasons for the system's popularity is that it can be easily scaled. This means that more functionality can be added to meet the requirements of different owners and operators, as well as for specific transportation contracts."

The deal further strengthens ABB's leading position as a provider of integrated software solutions for semi-submersible heavy lift vessels. ABB estimates that 90% of vessels in this sector already use OCTOPUS in their operations.

Bolidt gets a warm reception from polar cruise operators

The well-established position of Bolidt Synthetic Products & Systems decking and flooring in mainstream cruise ship and superyacht markets has been quickly converted into a series of business wins in the fast-emerging polar expedition cruise ship sector.

The most recent contract for the Dutch manufacturer's hardwearing, environmentally friendly and visually attractive products covers the Hurtigruten newbuildings, Roald Amundsen and Fridtjof Nansens, two hybrid propulsion expedition cruise ships under construction at Kleven shipyard in Norway. These 20,889grt, 530-passenger vessels are both due for delivery in 2019.

Hapag Lloyd also has a pair of polar class expedition cruise ships, Hanseatic Nature and Hanseatic Inspiration, on order at the Vard shipyard in Tulcea, Romania which will feature extensive Bolidt decking systems onboard. The 15,650grt, 230-passenger capacity ships are also due to enter service next year.

Jacco van Overbeek, Director Maritime Division at Bolidt, believes the company's reputation in the mainstream cruise and yacht sectors has helped it to secure a significant share of the fast-growing expedition cruise sector, whether used for balconies, indoor and outdoor decks and public spaces.

"We have been successful because we are already well known for our high quality of workmanship, flexibility and speed of installation, and for our ability to deploy our own specialized application teams worldwide," said Van Overbeek. "This enables us to take on jobs at many different yards around the same time."

However, Van Overbeek adds that important innovations have been needed to take account of the new environment: "Many of the ships call for heated deck systems, as well as special surface treatments to ensure our products remain resistant to extremely low temperatures."

Bolidt's unique inhouse R&D facilities, which include state-of-the-art technology such as a climate chamber and accelerated weathering lab for testing advanced materials in extreme conditions, have meant that these environmental challenges can be overcome.

Bolidt is supplying a range of well-proven synthetic deck products to these vessels, including Bolideck® Future Teak, Bolideck Select and Bolideck Helideck.

Other polar class newbuildings under construction that will feature Bolidt decking materials include Crystal Endeavour, which is the largest polar cruise yacht yet to be built. The 200-passenger capacity, 19,800 grt vessel, is being built in Germany at the MV Werften yard and is due to enter service in 2020.

Bolidt is also working on a series of three luxury Ritz Carlton Cruises vessels, each with capacity for 298 passengers, to be delivered in 2020 by Spain's HJ Barreras shipyard. Again, the Dutch company is the preferred supplier for Mystic Cruise's World Explorer, which is being built at Portugal's West Sea Yard for Quark Expeditions. The 9,300grt vessel will accommodate 176 passengers onboard.

As well as new polar cruise ships, Bolidt products can be found on several existing expedition vessels. Ships of this type in service with Bolidt systems include Celebrity Xpedition and Linblad Expeditions' National Geographic Sea Lion, Sea Bird, Endeavour, Explorer, Islander, Orion and Quest. Some of these vessels had Bolidt systems as newbuildings, while others have been upgraded with the Dutch company's synthetic materials during subsequent refits.

FUELSAVE introduces fuel consumption and emissions abatement game-changer

FUELSAVE GmbH, a German energy efficiency start up for fuel and emissions reduction, has launched a ground-breaking technology capable of optimising the fuel consumption efficiency of all marine diesel engines.

The technology, proven in both in-the-field and laboratory tests, is offered with a contractually guaranteed 10% saving on overall fuel costs. The technology also significantly reduces CO_2, NOx, and Particulate Matter (PM) emissions, through a cleaner and cooler combustion process.

FS MARINE+, a patented engine efficiency enhancement system uses an onboard hydrogen synthgas generator to inject a gas and liquid water/methanol solution into an engine's combustion chamber to significantly improve efficiency.

According to Marc Sima, the company's co-founder and President, FS MARINE+ can be applied to almost all types of two- and four-stroke engines, although those running on HFO, MGO or MDO benefit from the greatest efficiency gains and, consequently, the highest savings and best return on investment (RoI).

Efficiency gains were confirmed during land-based tests carried out by FTVR, the same independent test laboratory at the University of Rostock, Germany used by engine builders to assess their engines' emissions behaviour.

Even though the test engine operated only one cylinder, the FS MARINE+ system was shown to reduce fuel consumption by up to 11.8%, NOx by up to 36% and Filter Smoke Number (FSN) by 40%. The solution was also shown to reduce the engine's air intake manifold temperature by 50°C, without detriment to engine operation and performance.

Similar efficiency gains were achieved during pilot trials on the four-stroke onboard a 160m long heavy-lift crane vessel, one of the largest in Europe. During the 30-month trials, overseen and verified by the shipowner, independent third parties, authorities and engine service companies, the introduction of FUELSAVE's enhancement resulted in significant reductions in fuel consumption and emissions.

Engine wear and tear was also found to have been significantly reduced, compared to those engines that operated without the FS MARINE+ solution. This was due to a cleaner combustion, cleaner cylinder heads, great-

FS Marine+ efficiency has been verified during pilot tests aboard a heavy lift vessel

FUELSAVE's engine efficiency solution is approved by DNV GL

er cylinder lubrication efficiency and substantially fewer carbon deposits, all of which had a beneficial impact on engine maintenance.

The vessel's chief engineer and the engine service company also noted that FUELSAVE system led to smoother engine operation with reduced levels of engine vibration.

"Results from these trials have verified the performance of FS MARINE+," said Sima. "Through independent analysis and reports from engine service and maintenance companies, as well as from a university testing institute, we are confident in introducing the product to the maritime market.

"FS MARINE+ has the potential to reduce fuel costs and emissions considerably. This is why we offer a contractual guarantee of a 10% reduction in fuel consumption. Our pricing model provides a return on investment of just three years within a five-year standard warranty period, extendable for 15 years to further maximize the RoI."

The technology, approved by DNV GL, can be retrofitted to any vessel, runs completely autonomously and without the need for any special training. It allows operators of older tonnage to achieve IMO Tier I and Tier II compliance and can be used on IMO Tier III engines for even greater fuel efficiencies. This is because the emissions are controlled through the exhaust after-treatment system of a Tier III compliant vessel.

FUELSAVE plans to roll out further systems over the next two years, by which time the company hopes FS MARINE+ will be fully recognised in the market and approved by all the main marine engine builders.

"We aim to establish FS MARINE+ as the industry standard for fuel efficiency across the maritime industry, not only capable of protecting the environment but increasing the profitability of ship operators," said Sima.

FUELSAVE has already been appro ached by shipyards and engine manufacturers interested in validating the technology and incorporating the FS MARINE+ solution in their engine products so that their customers can gain a competitive advantage

Singapore MPA Selects Aqua-Tools B-Qua Kit For Ballast Water Testing

French water microbiology expert aqua-tools has won a tender to supply Singapore's Maritime and Port Authority (MPA) with its B-QUA ballast water test kits.

A public tender was issued in March inviting several companies to quote for supplying a number of kits to the MPA for use by both port and flag state control authorities.

Carine Magdo, aqua-tools' Business Development Manager, said "We are delighted to be able to support the MPA in its initiative to consider implementing a ballast water testing regime. Our user-friendly, portable and, above all, effective B-QUA test kits will give MPA users the tools to carry out rapid, indicative analysis of ballast water in line with the requirements of the Convention."

Five B-QUA ballast water monitoring solutions and test kits will be supplied by Singapore headquartered Atlas Marine Services (AMS), which manages B-QUA sales and distribution across the Southeast Asia region. AMS was instrumental in securing the order.

AMS, CEO, Stephen Herron said "aqua-tools' B-QUA was selected because it met all the MPA's requirements. It is capable of testing for all three size classes of viable organisms, including bacteria; it complies with the indicative analysis

methods stipulated in the BWMC; it provides traceable measurement results within a time frame compatible with port operations; and gives stakeholders the information they need to correctly evaluate the efficiency of ballast water treatment systems."

Another criterion aqua-tools met was that the method needed to deliver confidence that the results demonstrated a scientific correlation between the indicative method and detailed analysis, both in the lab and in the field.

Emerson Study Reveals $7 Billion Profit Potential

By adopting advanced automation technologies and new processes, unconventional oil and gas operators can move from average to top-quartile performance, capturing up to $7 billion in profits annually, according to a recent study conducted by Emerson and industry benchmarking firms of onshore producers in the lower 48.

In a "lower-for-longer" oil price environment, many companies are turning to Industrial Internet of Things (IIoT) technologies and the promise of digital transformation to help embed expertise in work processes, improve production and begin the path to operational excellence. Emerson's Operational Certainty™ program helps oil and gas operators confidently deploy a digital transformation strategy in a targeted, scalable and measurable manner. Emerson estimates an average operator that adopts a comprehensive improvement program could see profitability improve by as much as 10 percent.

The analysis shows higher production rates, lower lease operating expenses (LOE) and a reduction in safety risks have the greatest impact on overall operational improvements. Improvement in these areas matters most to liquids-weighted unconventional oil and gas operators and helps them achieve top quartile performance. Top Quartile is defined as achieving operations and capital performance in the top 25 percent of peer companies and requires changing historic work processes across multiple functions.

For unconventional oil and gas operators, Emerson identified key technologies to quickly improve operations in a scalable way:

- Optimizing production with automated production surveillance, modelling and analytics and implementing produced fluids management techniques to reduce lost and unaccounted-for production
- Improving equipment reliability by leveraging analytics and automation diagnostics to lower LOE, providing greater visibility of costs per well
- Using prescriptive instead of reactive maintenance to improve health, safety, security and environmental compliance (HSSE) and reduce personnel exposure

By harnessing the power of the IIoT and other transformation technologies, advanced automation systems can optimize operations with real-time information from a pervasive sensing layer and securely feed that data to robust standard analytics applications. With this data, experts – anywhere in the world – have better insight to respond quickly and confidently to changing conditions. This provides oil and gas operators the diagnostic capabilities and data insights to predict instead of react to issues, make better decisions and reduce risks.

"There's broad knowledge among operators about improving production, yet understanding how to consistently achieve real, sustainable savings is not as clear," said Chris Amstutz, vice president, oil and gas industry programs, Emerson Automation Solutions. "For example, we have the software now to help production meet targets by leveraging the latest reservoir model data that shows what's going on in the field to avoid drilling the wrong wells."

The digital transformation of exploration and production means higher production rates, lower LOE and reduced safety risks, among other benefits. Emerson's Operational Certainty Consulting Group advises operators to start their digital transformation by developing a practical blueprint that leads to higher production with more actionable and timely insight into the performance of the field, minimizing HSSE risk by enabling the workforce with remote field intelligence, and reducing LOE by optimizing work processes and logistics.

Siemens' extended Model Based Systems Engineering solution 'Innovation'

Uniquely enables multi-disciplinary solutions for Model Based Systems Engineering across all major engineering disciplines

Siemens PLM Software announced today extensions to its portfolio for model based systems engineering (MBSE) to enable Multi-Domain Engineering as a key component of the Systems Driven Product Development strategy.

Building on its extensive MBSE technology, which includes Teamcenter® software, Simcenter™ software, Capital™ software, NX™ software, and Polarion™ software, Siemens PLM Software is further enriching the solution with a strong commitment to open standards and the open source software enabling these technologies to integrate with the digital twin.

For this purpose, Siemens PLM Soft ware has entered into a partnership agreement with Obeo, an innovative software provider of customizable modeling solutions. The partnership with Obeo will greatly complement Siemens' Multi-Domain Engineering capability by providing highly flexible modeling solutions, engineering methodologies and industry-specific process templates.

These offerings allow customers the flexibility to either use standard modeling languages, such as System Modeling Language (SysML) or Capella, or to apply their own process methodology. Providing cross-discipline integration across the product architecture helps connect the industry's most complete digital twin in a unique way, creating a multi-domain digital twin by enabling systems engineering across the entire product lifecycle.

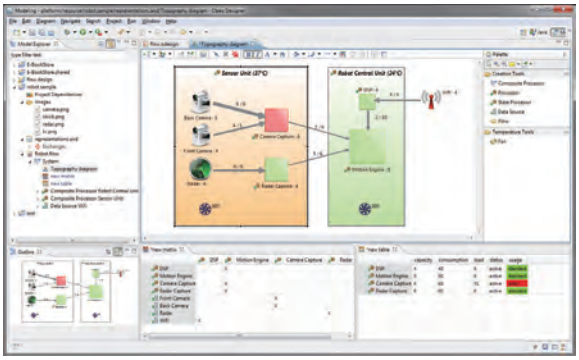

"With this partnership, Obeo brings users of Siemens PLM Soft ware the benefits of closed-loop model integration between product architecture and downstream engineering," said Etienne Juliot, vice-president and cofounder of Obeo. "Managing the system, software and hardware architecture characteristics in an integrated repository that is 'single source of truth' uniquely enables a digital thread across the digital twins, and therefore the best way to find an optimal trade-off between reliability, cost, and performance to master multi-domain system development."

Through the Systems Driven Product Development solutions, Siemens offers the next-generation capability to provide a clear step beyond existing point-to-point software integrations. The combined solution, underpinned by the collaboration platform Active Workspace for Teamcenter, can be used to optimize designs for cost, performance and in-service maintenance, and to deliver continuous validation against requirements. The user experience is augmented by co-design aids such as cross visualization and automatic object reconciliation between NX, Simcenter and Capital, our integrated electric and electronic design and validation platform.

"Siemens' System Driven Product Development solutions are unique to the market in the way that we are able to integrate MBSE throughout the entire product lifecycle with Teamcenter," said Tony Hemmelgarn, CEO of Siemens PLM Software.

"Siemens' longstanding culture of openness resonates well with Obeo's mission to provide open software solutions to create and transform complex systems, leveraging open source technologies such as Sirius, Acceleo and Capella.

Together, we look to help further our customers' goal to implement innovative and flexible modeling solutions, combining the value of open source and the reliability of established software providers."

Alfa Laval PureSOx connectivity on container vessels

The Grimaldi Group will take advantage of Alfa Laval PureSOx scrubber connectivity on five ACL vessels.

The Grimaldi Group, a long-time Alfa Laval PureSOx customer, has signed an agreement for PureSOx connectivity services on five vessels operated by Atlantic Container Line (ACL). The services will provide not only compliance monitoring, but also valuable data for use in optimizing PureSOx operation.

The Grimaldi Group has been using PureSOx for exhaust gas cleaning aboard its vessels since 2014. ACL, a Grimaldi Group company specialized in transatlantic cargo shipping, has hybrid PureSOx scrubber systems installed on all five of its Generation 4 (G4) vessels: Atlantic Sail, Atlantic Sea, Atlantic Sky, Atlantic Star and Atlantic Sun.

The PureSOx systems on these vessels will now be retrofitted with the Alfa Laval Remote Emission Monitor (ALREM), a data reporting and storage device that forms the basis for the growing PureSOx connectivity programme. The Grimaldi Group has signed an agreement for PureSOx connectivity that extends over the next three years, after which the services and their benefits will be evaluated.

Grimaldi Group has signed an agreement for PureSOx connectivity services on five vessels operated by Atlantic Container Line (ACL).

New benefits with connected technology

In fact, connectivity based on the ALREM is just one part of a much larger PureSOx service agreement for the ACL vessels. Training, yearly inspections, spare part supply and a sensor exchange programme are also included in the contract. But the addition of connectivity creates altogether new possibilities.

"We are eager to start taking advantage of connectivity with our PureSOx systems," said Pierluigi Marmo, Tech nical Manager of the ACL G4 vessels. "Alfa Laval provides us with good service already, but the customized connectivity services will increase our own insight and give us even greater access to the Alfa Laval service organization. Both of those things will make life easier for ACL and the Grimaldi Group as a whole."

Part of a total connectivity strategy

In addition to strengthening the ties between the ACL vessels and Alfa Laval service expertise, the ALREM will fit neatly into the Grimaldi Group's own connectivity plans. The group is working on a proprietary solution to connect equipment across its vessels, into which the ALREM will also be integrated. This will ensure that all information valuable to the Grimaldi Group is available in one place.

"We've seen the value that collected data can offer," said Dario Bocchetti, Corporate Energy Saving Manager for the Grimaldi Group. "By evaluating data from the current data logging

system, for example, we've realized that PureSOx releases even less SOx than if we were sailing on MGO. With a fully connected solution based on the ALREM, such analyses will be far easier to perform."

Strong partnership going forward

Ultimately, Bocchetti sees the potential for making even better use of the PureSOx scrubbers across the Grimaldi Group. "Connectivity is useful for seeing where we are and demonstrating our compliance easily, but it will also be beneficial for our operational levels down the road," he explained. "The more Alfa Laval can help us learn from the data, the more we can help our crews to understand our PureSOx systems and operate them in an optimal way."

Alfa Laval PureSOx

The possibility of enhancing reliability, savings and control makes Bocchetti enthusiastic about deepening the already long partnership between the Grimaldi Group and Alfa Laval. "We are glad to be part of the development surrounding the scrubber digitalization, ALREM and PureSOx connectivity," he concluded. "The Grimaldi Group has worked closely with Alfa Laval in exhaust gas cleaning and we believe strongly in this next step together."

AVEVA Supports BASF's Smart Manufacturing Program

AVEVA announced BASF selected AVEVA1 to accelerate their strategic Smart Manufacturing programme. BASF will implement AVEVA's Enterprise Asset Performance Management (APM) solution to improve connectivity of people, processes and equipment, creating additional value for their customers through greater asset availability and workforce efficiency.

Several aspects of BASF's Smart Manufacturing programme will be supported by AVEVA's flexible, easy to use platform, including Augmented Reality and Predictive Maintenance applications. BASF will leverage these solutions to empower their workforce and monitor critical assets on a global scale to predict equipment failures before they occur.

"Our Smart Manufacturing programme targets to increase the effectiveness of our plants and the efficiency of our production processes using digital technologies and data," said Uwe Hinsen, Vice President, Smart Manufacturing at BASF, "AVEVA's Predictive Maintenance and Augmented Reality solutions help us to achieve our target of an overall digital plant."

"In an industry with high value assets producing quality products under heavy regulatory scrutiny, chemical companies can benefit greatly from digitalising their business," said Dr. Tobias Scheele, Head of Global Accounts at AVEVA. "We are excited to collaborate with BASF on their digital transformation journey to achieve optimal manufacturing efficiency."

Coldharbour targets Greek market as BW demand picks up

Coldharbour offers a unique in-voyage treatment system for large vessels based on inert gas technology.

"Posidonia could not have come at a better time for us," said Andrew Mars hall, Coldharbour Marine Chief Executive, a few days before Posidonia opened its doors to the global shipping community in Athens. "We are in the final stages of a successful ballast water treatment installation for one of our key Greek clients, and we are in negotiations with several other potential customers in this important market. The ballast water treatment sector is picking up at last."

"Greek shipowners are important to us," Marshall continued, "because they operate one of the world's largest fleets and focus on the market sectors in which we specialise - big tankers, bulk carriers and LNG vessels. Of course, their existing ships trade worldwide for many of the world's blue-chip charterers and Greek owners realise the importance of being able to operate their ships anywhere, at any time, without hindrance. Ballast water discharge compliance is essential.

"The retrofit market is also very important to us, but we note that the Greeks are active once again in contracting new ships," Marshall said. "If history has taught us anything, it is that Greek owners have excellent timing and are usually ahead of the game. Following at least two years of minimal ship orders, we expect the level of contracting to pick up again in the months ahead."

Coldharbour, which offers a unique in-voyage treatment system for large vessels based on inert gas technology, is at the advanced stages of negotiations for several projects, including installations aboard some of the largest ships in the world. For the operators of these vessels, the financial and reputational risks resulting from disruptions to terminal operations or non-compliance are unthinkable: they must be certain that the necessary discharge standards can be met.

"We have found that our potential customers in Greece are thorough in conducting their due diligence procedures," Marshall revealed. "No single ballast water treatment technology is 100% effective at all times and under all operating conditions, so there are pros and cons to be assessed and choices to be made. It is becoming increasingly clear that the choice of treatment system is a critical decision which will have far-reaching cost and reputational implications, and even a ship's future second-hand value could be adversely impacted."

Marshall went on to describe the importance of system choice at the newbuilding stage. A lack of engagement on this important decision, he said, could lead to the installation of a shipbuilder's standard system which in some cases may not be fit for purpose once the intended operating parameters of the vessel are factored in.

Andrew Marshall, Coldharbour Marine Chief Executive

One important consideration highlighted by scientific experts is the question of marine organism re-growth during long ballast voyages. Neither the IMO's type approval process, nor that of the US Coast Guard, adequately ad dress this issue, according to Mar shall. The result is that ballast water treated at uptake could well comply with discharge standards at that time, but not after the possible re-growth of organisms during a long ballast voyage.

"We are looking forward to the opportunities that Posidonia will provide," he said, "and we will be happy to welcome all visitors to our stand where we can explain the merits of our unique technology."

Kraus & Naimer
BLUE LINE switchgear

◈UPS Bypass Swtich의 장점

▶ 최고의 신뢰성
- 완벽한 내구성
- 100여년간 스위치만 만든 Kraus & Naimer
- Kraus & Namier는 세계적 기업으로 전 세계 어디서든 구매 가능

▶ 다양한 확장성
- 10A ~ 2400A 용량
- Normal – Bypass
- Normal–Test–Bypass (UPS Test mode 가능)
- System 구성의 필요에 따라 회로 구성 가능

◈UPS 구성 예시

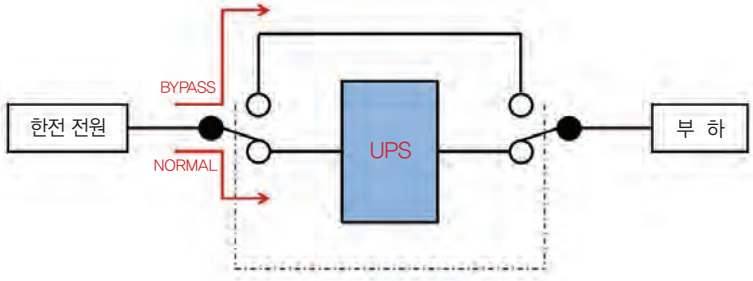

◈ 안전성

▶ 차단기를 사용할 경우
- 세 개의 차단기를 순서대로 차단/투입시켜야만 하는 불편함
- 오동작 가능성 높음

▶ UPS 스위치를 사용할 경우
- 손쉬운 Normal – Bypass 전환 가능
- 긴급 상황시 비인가자도 전환 가능
- 기계적 인터록 구성으로 오동작 가능성 없음

◈ Application

▶ Repair / Emergency 상황
▶ UPS Replacement

※ 연락 하시면 종합 Catalog을 보내드립니다

KUMSAN
(주)금산엠엔이

서울시 금천구 시흥대로 281(시흥동, 새한벤처월드빌딩 #506)
TEL : 02)804-9666 FAX : 02)804-9664 E-mail : info@kumsanmne.com
www.kumsanmne.com

대우조선해양, 3조원 규모 육상 원유생산 플랜트 첫 모듈 출항

지난 2014년 창사 이래 최대 금액인 약 27억 달러의 육상 원유생산 플랜트 수주 소식을 전한 대우조선해양이 드디어 첫 결실을 맺었다.

대우조선해양은 카자흐스탄 텡기즈 유전에 설치되는 초대형 원유생산 플랜트(이하 TCO 프로젝트) 첫 모듈 건조를 완료하고 지난 5월 25일 출항식을 가졌다.

이날 출항한 TCO 프로젝트 첫 모듈은 대우조선해양 자회사인 울산 신한중공업을 출발해 인도양을 지나 이집트 수에즈운하(Suez Canal), 러시아 볼가돈 운하(Volga-Don Canal), 카스피해를 거쳐 카자흐스탄 텡기즈 유전까지 총 19,000Km에 달하는 거리를 약 90일 간의 긴 여정으로 운송될 계획이다. 특히 러시아 볼가돈 운하를 안전하게 통과하기 위해 모듈을 2단, 3단으로 분리해 현지까지 운송한 후 다시 조립하는 고난이도 신공법(De-Stacking)이 적용됐다.

TCO 프로젝트는 총 81개 모듈로 구성되어 있으며, 대우조선해양 옥포조선소 53개, 자회사 신한중공업에서 28개 모듈을 제작한다. 이번에 출항한 모듈 2개는 신한중공업에서 제작됐으며, 2020년 7월까지 나머지 79개 모듈을 순차적으로 인도할 계획이다.

총 계약금액 3조원에 달하는 TCO 프로젝트는 금액뿐만 아니라 규모면에서도 역대 최대를 자랑한다. 81개 모듈 전체 무게만 약 20만톤에 달해 1.5톤 규모 중형승용차 약 13만대 무게와 맞먹는 초대형 프로젝트이다.

최근까지 저유가로 인해 해양플랜트 일감이 줄어든 상황에서 TCO 프로젝트는 해양플랜트 생산인력이 약 3년 정도 안정적으로 일할 수 있는 물량이다. 향후 발주될 해양플랜트 수주에 대비한 기술력 향상 및 핵심 기술인력 유지 역할까지 톡톡히 하고 있다.

특히 대우조선해양은 모듈 제작만 담당하는 AFC(Approved for Construction)방식의 계약 체결로 손실 발생위험을 계약단계에서 차단했으며, 건조 과정 중 발생하는 설계변경 및 추가 공사비용도 연동되어 증액된다.

대우조선해양 관계자는 "지난 3년간 지속된 저유가 기조를 깨고 최근 국제유가가 상승하고 있어 오일메이저를 중심으로 해양플랜트 발주 증가가 기대되고 있다"며 "TCO프로젝트 공사를 성공적으로 수행해 주문주의 신뢰도를 높이고 향후 해양사업 수주에 좋은 결과물을 만들 수 있도록 최선을 다하겠다"고 말했다.

한편 카자흐스탄은 중앙아시아 국가 중 가장 많은 원유매장량을 보유하고 있어, 추후 대형 프로젝트가 발주될 가능성이 높은 지역이다. 원유 생산량 증산의 필요성도 지속적으로 제기되고 있어, 향후 카자흐스탄 및 중앙아시아 카스피해 지역에서 발주되는 프로젝트에서 유리한 위치를 선점할 수 있을 것으로 보인다.

연간 최대 70억 달러의 수익향상

에머슨 및 미국 내 온쇼어(on-shore) 업계 벤치마크 회사들이 수행한 최근 연구에 따르면, 석유 및 가스 오퍼레이터들이 첨단 자동화 기술과 신규 공정을 채택함으로써 평균에서 최상의 퍼포먼스인 Top Quartile을 달성하고 연간 최대 70억 달러의 이익을 낼 수 있다.

"낮을 수록 길어지는" 유가 환경에서 많은 기업들은 작업 공정에 전문성을 불어넣고, 생산성을 향상하며, 운영 효율성을 향한 길을 모색하기 위해 산업사물인터넷(IIoT) 기술과 디지털화의 가능성에 눈을 돌리고 있다.

에머슨의 운영상의 확실성 프로그램(Operational Certainty)은 석유 및 가스 오퍼레이터들이 목적에 맞고 확장 가능하며 측정 가능한 방식으로 디지털화 전략을 활용할 수 있도록 돕는다. 에머슨은 평균 운영자가 포괄적인 개선 프로그램을 사용할 경우 수익성이 10% 향상될 것으로 예측한다.

분석에 따르면 보다 높은 생산률과 낮은 운영리스비용(LOE) 및 안전 위험의 감소가 전반적인 운영 개선에 가장 큰 영향을 미치는 것으로 나타났다. 이들 영역의 개선은 액체에 집중된 비전통 석유 및 가스 오퍼레이터들에게 있어 가장 중요하며, 이들이 Top Quartile 성과를 얻을 수 있도록 돕는 역할을 한다. Top Quartile 이란 동종 업계 회사들과 비교하여 상위 25%의 영업 및 자본 성과를 달성하는 것을 뜻하며, 다양한 기능에 걸친 작업 공정의 변화가 뒷받침 되어야 한다.

에머슨은 비전통 석유 및 가스 오퍼레이터들이 운영 활동들을 가변적으로 빠르게 향상하기 위해 필요한 핵심 기술들을 아래와 같이 요약했다.

- 자동화된 생산감시, 모델링 및 분석으로 생산을 최적화하고 생산된 유체 관리 기술을 적용하여 생산손실 관리
- 분석 및 자동화 진단을 활용하여 LOE를 낮춤으로써 장비의 신뢰성을 향상시켜 각 유정(well)에 대한 비용을 보다 잘 파악
- 대응적 유지보수가 아닌 처방적 유지보수로 HSSE(보건, 안전, 보안, 환경)를 개선하고 작업자의 유해 노출을 감소

첨단 자동화 기술은 사물인터넷(IIoT)과 기타 변환 기술을 활용하는 것으로 퍼베이시브 센싱(pervasive sensing)을 통해 얻은 실시간 정보에 기반해 운영 활동을 최적화한다. 또한, 이 데이터를 강력한 표준 분석 어플리케이션으로 안전하게 전송할 수 있다. 전문가들은 전 세계 어디에서든 해당 데이터를 사용하여 변화하는 조건에 빠르고 자신 있게 대응할 수 있다. 이는, 석유 및 가스 오퍼레이터들에게 진단 능력과 데이터 통찰력을 제공하여 문제를 사전에 예측하여 보다 나은 의사 결정을 내리고 위험을 감소할 수 있도록 해준다.

에머슨 오토메이션 솔루션즈의 석유 및 가스 산업 프로그램 부문 부사장인 Chris Amstutz는 "오퍼레이터들은 생산 향상을 위한 일반적인 지식은 갖고 있지만 실질적이고 지속 가능한 관점에서 절감을 어떻게 달성할 수 있는지를 명확하게 인지하고 있지 않다"며, "한 예로, 잘못된 유정에서 시추하는 일을 방지하기 위해 현장과 관련된 최신 reservoir 모형 데이터를 사용하여 생산 목표를 달성할 수 있도록 돕는 소프트웨어가 존재한다"고 덧붙였다.

탐사 및 생산의 디지털화는 결국 더 높은 생산율과 낮은 LOE, 그리고 안전 위험성의 감소를 뜻한다. 에머슨의 운영상의 확실성 컨설팅 그룹(Operational Certainty Consulting Group)은 현장 성능에 대한 실행 가능하고 시기 적절한 통찰력을 통해 생산성을 높이고 원격 현장 인텔리전스로 인력을 활성화함으로써 HSSE 위험을 최소화하며, 작업 프로세스와 물류를 최적화하여 LOE를 낮추는 것이 바로 디지털 전환의 시작이라고 강조한다.

지멘스, 모델 기반 시스템 엔지니어링 솔루션 확장

모든 제품 개발 분야에 있어서, 모델 기반 시스템 엔지니어링(MBSE)을 멀티-디스플러네리(multi-disciplinary) 솔루션에 유일하게 적용 가능하게 하다.

지멘스 PLM 소프트웨어가 자사의 모델 기반 시스템 엔지니어링(MBSE; model based systems engineering) 포트폴리오의 확장을 통해 시스템 기반 제품 개발 전략의 핵심 요소인 다분야 엔지니어링을 한층 강화한다고 밝혔다.

Teamcenter® 소프트웨어, Simcenter™ 소프트웨어, Capital™ 소프트웨어, NX™ 소프트웨어 및 Polarion™ 소프트웨어를 포함하는 광범위한 MBSE 기술을 기반으로, 지멘스 PLM 소프트웨어는 개방형 표준과 오픈소스 소프트웨어에 대한 투자를 강화하고 있다.

이를 위해 지멘스 PLM 소프트웨어는 맞춤형 모델링 솔루션을 제공하는 소프트웨어 기업인 오베오(Obeo)와 파트너십 계약을 체결했다. 이번 파트너십으로 지멘스 PLM 소프트웨어는 매우 유연한 모델링 솔루션과 엔지니어링 방법론, 산업별 프로세스 템플릿을 제공할 수 있게 됨으로써, 지멘스가 보유한 멀티도메인(multi-domain) 엔지니어링 기능을 대폭 보완할 수 있게 되었다.

이를 통해 고객은 시스템 모델링 언어(SysML)이나 카펠라(Capella)와 같은 표준 모델링 언어를 사용하거나 자체 프로세스 방법론을 적용하는 등 폭넓은 선택권을 갖게 된다. 제품 아키텍처 전반에 걸친 분야간 통합은 업계에서 가장 완벽한 디지털 트윈을 고유의 방식으로 연결할 수 있게 하며, 이는 전체 제품 수명주기에 걸친 시스템 엔지니어링을 가능케 해 멀티도메인 디지털 트윈을 형성한다.

에티엔 줄리엇(Etienne Juliot) 오베오 부사장 겸 공동창업자는 "지멘스 PLM 소프트웨어 사용자들은 오베오와의 파트너십을 통해 제품 아키텍처와 다운스트림 엔지니어링 간의 폐루프(closed-loop) 모델 통합이 제공하는 혜택을 누릴 수 있다"며, "시스템, 소프트웨어, 하드웨어 아키텍처 특성을 하나의 통합된 저장소에서 관리함으로써, 디지털 트윈 전반에 걸쳐 단일 데이터 모델을 생성 및 공유하여 안정성, 비용 그리고 성능적인 측면에서 최적의 다분야 시스템 개발이 가능하다"고 말했다.

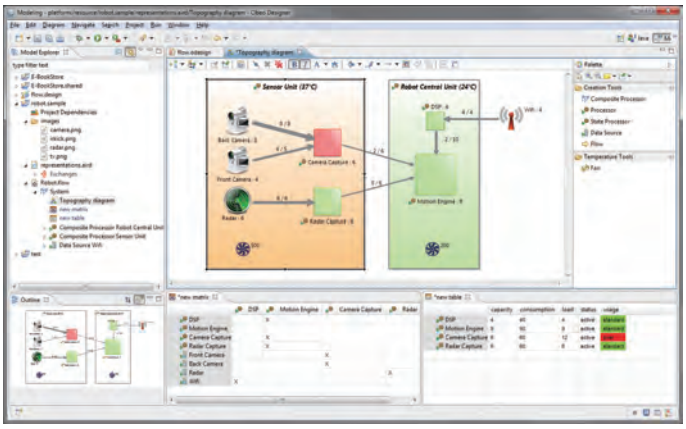

지멘스는 시스템 기반 제품 개발 솔루션을 통해 기존의 포인트-투-포인트(point-to-point) 소프트웨어를 통합한 것 이상의 차세대 기능을 제공한다. 이 통합 솔루션은 팀센터용 협업 플랫폼인 액티브 워크스페이스(Active Workspace)에 기초해 설계 비용, 성능, 서비스 내 유지보수를 최적화한다. 또한 설계 요구 사항에 대한 지속적인 검증에 활용할 수 있다. 사용자 경험도 한층 강화되었다. 이를 위해 NX 및 심센터와 지멘스의 통합 전자·전기 설계 및 검증 플랫폼 인 캐피털 간 교차 시각화(cross visualization)와 자동 객체 조정(automatic object reconciliation)과 같은 공동 설계 지원(co-design aids) 기능이 제공된다.

토니 헤멀건(Tony Hemmelgarn) 지멘스 PLM 소프트웨어 CEO는 "지멘스의 시스템 기반 제품 개발 솔루션은 전체 제품 수명주기에 걸쳐 MBSE를 팀센터와 통합할 수 있는 고유한 방식을 시장에 제공한다. 오베오는 시리우스(Sirius)나 액셀레오(Acceleo), 카펠라(Capella)와 같은 오픈 소스 기술을 사용해 오픈 소프트웨어 솔루션으로 복잡한 시스템을 생성하고 혁신하려는 사명을 갖고 있다. 이는 개방을 가치로 내세워 온 지멘스의 오랜 문화와 부합한다. 이번 파트너십을 통해 우리는 오픈 소스의 가치와 기존 소프트웨어 업체들의 신뢰성을 결합해 혁신적이며 유연한 모델링 솔루션을 구현하려는 고객의 목표를 지원하기 위해 노력할 것"이라고 말했다.

온도/ 습도/ 이슬 · 노점
기체속도/ 가스/ 압력/ 신호 전송기

온도/ 습도 신호 전송기

THM80X
합금외함 고정밀형
온습도전송기

THS80X
정밀형 온습도
신호전송기

THS30X
경제형 온습도
신호전송기

THS307
옥외 겸용
온습도 전송기

THR13/THR03
온습도 표시
신호전송기

THS13/14
선형 신호전송기

온도/ 습도/ 노점. 이슬점 측정기

THS88
노점 전송기

THS07
탐촉자형
온습도 전송기

THS86/87
삽입형
노점표시 전송기

SD05
복합형 신호 표시기

TP01
2선식 머리부착형
RTD 온도 신호전송기

TP02
레일부착 (궤조)형
온도신호 전송기

기체/ 가스 측정기

FTM84/85
고정밀 열선풍속전송기
(합금외함, 고속용)

FTS34/35
중속 유속
신호전송기

FTS14
열선풍속
전송기(저속)

FTS07
열선 풍속 전송기
(탐촉자형, 경제형)

AFMT+PMD33
평균 흐름률 측정관/
차압전송기

THG03
실내용 CO2 온습도
표시 전송기

가스/ 압력/ 신호 측정기

GTH53
복합가스 신호전송기

GS33/34
CO2 신호전송기

GM33/34
CO 신호전송기

L051/52
수위감지
신호전송기

THM80X
다기능 디지털
신호 표시 감시기

DPT02
레일부착 궤조형
신호변환기

길우트레이딩 1984

서울시 영등포구 선유로 33길 15, 703호(양평동3가, 에이스테크노타워)
TEL: 02-2636-0009 FAX : 02-2636-4753
www.gilwoo.co.kr www.gilwooshop.co.kr giltron@naver.com

Offshore performance permutations

Engine offerings for the new Wärtsilä AHTS (Anchor Handling Tug Supply) vessels ensure economy and adaptability.

Wärtsilä Corporation

By Nico Höglund, Manager, Applications Developments, Wär tsilä Marine Solutions

The main design criteria for the propulsion system of the new WSD 46-Series from Wärtsilä Ship Design were: high but flexible power for versatile vessel operation combined with market-leading fuel consumption.

One enabler of these characteristics is the Wärtsilä two-speed reduction gear for use with medium-speed engines. Another point to the very source of fuel efficiency – engine power.

According to their 150, 180 and the 220 ton bollard pull (tbp) capacities, the WSD 46-Series anchor handlers feature mechanical/electric hybrid propulsion and onboard electrical power systems based on 8-cylinder Wärtsilä 31 in

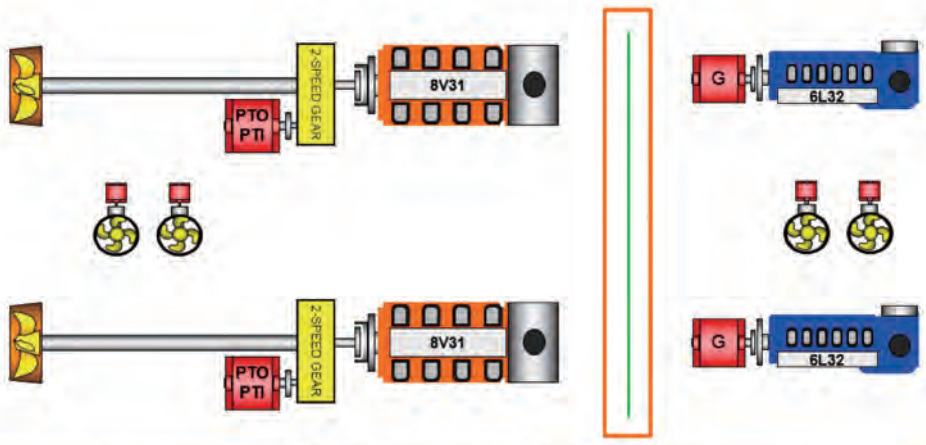

Bollard pull	Main engine	Aux engine
150 ton	2x 8L26	2x 6L26
180 ton	2x 6L32 or 2x 9L26	2x 8L26
220 ton	2x 8V31	2x 6L32

Figure 1. Typical hybrid mechanical-electric engine configurations and engine permutations on the WSD 46-Series anchor handler range.

V-configuration, 6-cylinder version of Wärtsilä 32 and Wärtsilä 26 diesel engines. The engines burn distillate fuel and are arranged in pairs of main and auxiliary engines with equal cylinder counts. Via motor/generators on the PTI/PTO shafts of the two-speed gears, the generator sets can provide propulsion power boost, or power can be generated from the main engines when the anchor handlers are steaming between destinations. In the boost mode, the vessels attain, on a hybrid mechanical-electric basis, the same flexibility as a "father-and-son" mechanical twin main engine propulsion system.

The idea was to design propulsion systems for the WSD 46-Series that are both modular and scalable.

Taking scalable first, this means that whichever of the three nominal bollard pull ratings the vessel has, its major arrangement remains unchanged, instead the main and auxiliary engine configurations are changed. And, in terms of modularity, the system is modular in the sense that it allows several different machinery concepts, so that it could also be readily executed as either fully electric or fully mechanical drive concepts.

Illustrating the adaptability of the basic concept, the 220 tbp AHTS vessel is offered with two 8-cylinder Wärtsilä 31 state-of the-art engines, recently also acknowledged by Guinness World Records as being the world's most efficient 4-stroke diesel engine. On the intermediate 180 tbp size, there is a choice of 6-cylinder Wärtsilä 32 engines or 9-cylinder Wärtsilä 26 main engines. In both cases, the auxiliary engines remain the same, i.e., 2 x 8-cylinder in-line Wärtsilä 26 on the 180 tbp and 2 x 6-cylinder in-line Wärtsilä 32 on the 220 tbp version.

Bollard pull power

For the 180 tpb size, there are two variants which are capable of meeting the nominal bollard pull with a varying number of cylinders, according to the needs of the anchor handler's operating profile.

This benefit of close adaptability to a given load profile is primarily enabled by Wärtsilä's "tug rating" concept.

Market research shows that the maximum bollard pull mode of an AHTS vessel is around 5% of the operating profile and sometimes much less. Thus, for those customers requiring lower operating times at maximum bollard pull, we have developed the tug rating. It states that the twin main engines on the WSD 46-Series vessels can be operated at up to 10% above their normal maximum rated output for 30 min-

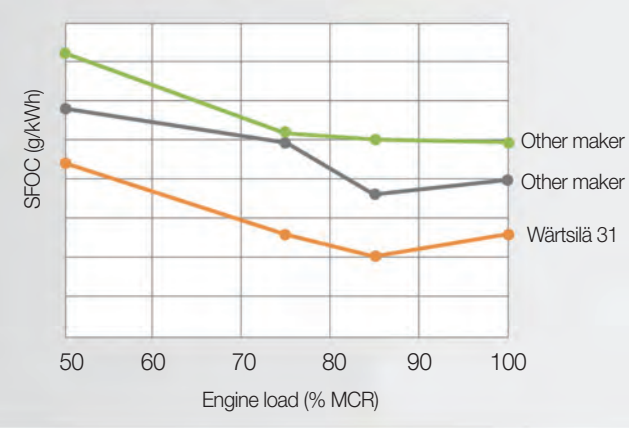

Figure 2. Fuel consumption graph of the Wärtsilä 31 engine in steaming (transit) mode.

utes out of every 12 hours. On the other hand the "tug rating" can also be used as a compliment to reach an additional max-plus bollard pull for a shorter period of time, which can give the operator further peace of mind knowing there is additional back-up power available.

A schematic of the 180 btp AHTS in its max 180 ton bollard pull mode illustrates the benefit of the tug rating option. With both the 9-cylinder in-line Wärtsilä 26 engines at 108% load, they are boosted via the PTO motor/generator on the 2-speed gear with input of around 1.9 MW to each CP propeller – i.e., with gen-sets running at 90% load while also feeding other onboard consumers.

Looking at the benefit of the tug rating option, maximum rated bollard pull is also available but, as per the tug rating specification, for a considerably shorter time. Therefore, the owner saves fuel by using an engine with fewer cylinders that can easily cope with the anchor handler's other operating modes and saves on maintenance since, as is well known, servicing on medium speed engines is primarily determined by the number of cylinders to be maintained.

Fuel efficiency

The tug rating benefit for the smaller engines reflects the fact that operating modes other than max bollard pull represent 95% of the typical operating modes of the WSD 46-Series anchor handlers.

Accordingly, the engines of the vessels, and their sophisticated control systems, have been chosen and tuned to achieve optimized fuel economy in every operating mode. Assisted by the two 2-speed gear concept, this is primarily achieved by automatically maximising the time the engines consume in their most economical operating range.

Transit mode

Anchor handlers consume most of their fuel in transit between harbours and offshore installations, meaning that favourable fuel efficiency with the engine at its optimal loading has the biggest impact on operating costs.

The graph of fuel consumption versus load for the Wärtsilä 31 engine shows that it is more fuel efficient than its 32 cm bore competitors under all load conditions. Building on this advantage, the propulsion control systems also include a sophisticated load sharing system designed to keep the engines in operation, at any given time, within their optimum operating ranges for fuel economy and low emissions.

The effect of maximising the engines' time spent in economical, load operating ranges becomes clear when looking at the time spent in dynamic positioning when engines are running at part load. The Wärtsilä 32 engine's fuel consumption versus engine load is best in 32 cm bore class also considering part load range where anchor handlers spend most of their operating time and therefore significant fuel savings can be achieved.

Dynamic positioning

The third major AHTS mode is dynamic positioning. This involves using the propulsion system to hold the vessel on a precise station, sometimes in strong winds, waves and currents, so that anchor handling and other functions can be executed close to a drilling rig or production platform.

For this function, the WSD 46-Series AHTS vessels use fore and aft tunnel thrusters powered from the generating sets. During dynamic positioning, which can be accompanied by loads from other electrical consumers such as the winches, it is important that the engines have good response to load changes since load on the thrusters varies considerably from second to second.

On the Wärtsilä 26 engines, Wärtsilä has tested and verified that they can cope with a 43% load step in two seconds, and the system is thus capable of meeting the needs of the 180 tbp vessel size in dynamic positioning mode. Similarly, a gradual power increase from 0 to 100% load can be executed in well below 20 seconds. In addition, the Wärtsilä 26 powered generating sets also have excellent blackout recovery. This capability is designed to cover a situation where we

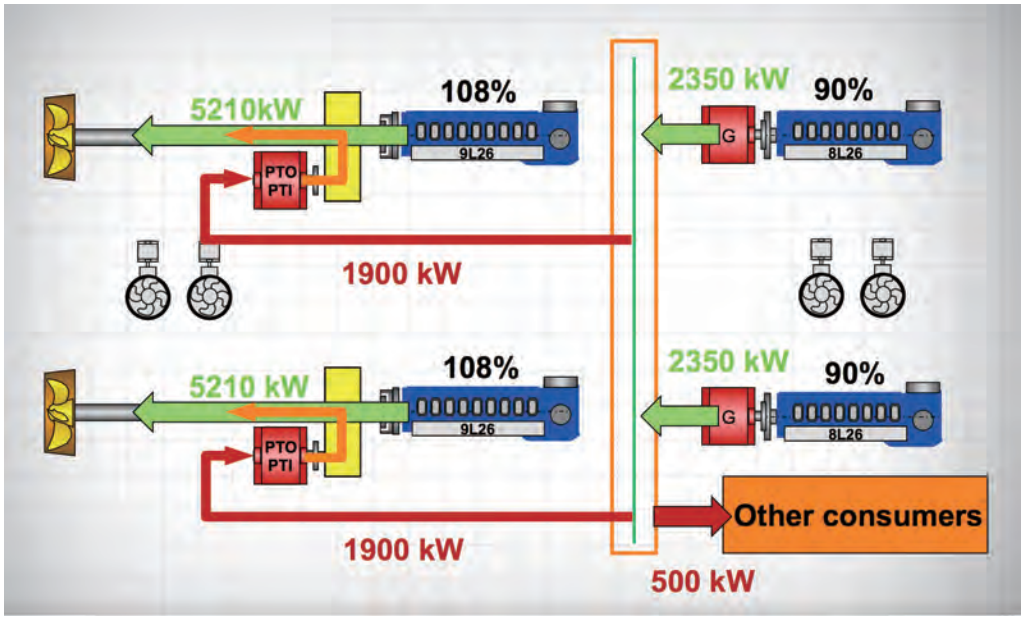

Figure 4. The 180 tbp AHTS variant with 9-cylinder in-line Wärtsilä 26 main engines in maximum bollard pull mode.

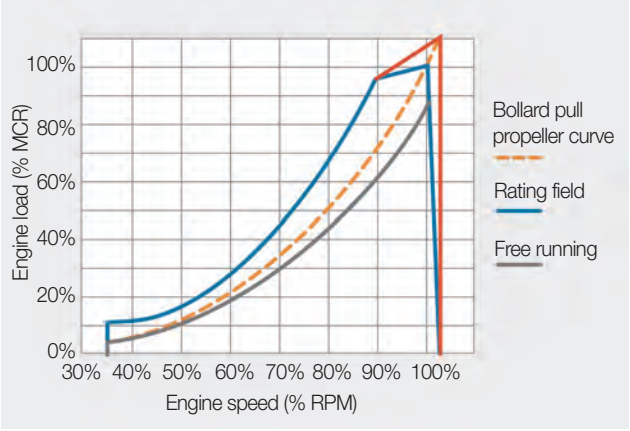

Figure 3. Tug rating operating field of the WSD 46-series AHTS vessels.

have only one generator set in operation, and it cuts out. If this occurs, the second gen-set can be on standby and take over the load within less than 10 seconds, giving a significant additional safety benefit to the whole vessel.

Environmental friendliness

The AHTS vessels are subject to emissions regulations, which set limits on oxides of sulphur (SOx) and oxides of nitrogen (NOx), with especially strict limits when vessels are in designated Emission Control Areas (ECAs).

These are mainly coastal waters near centres of population or areas of environmental sensitivity.

AHTS vessels usually use low sulphur distillate fuels, which mean they have no problems with SOX emissions. In terms of NOX, all Wärtsilä engines are tuned to work with our SCR aftertreatment units, and this is the form of NOx reduction we will use on the AHTS vessels to comply with IMO Tier III in ECAs. Wärtsilä engines used on the AHTS applications will have IMO Tier III certificates according to requirements.

Future conditional

What future holds for AHTS ships is hard to predict, but it is clear that the business environment is changing. It is becoming more and more competitive and challenging, fuel prices are much more volatile than in the past, and emission requirements are getting progressively stricter.

These factors are drivers for greater

efficiency, flexibility, and low emissions, and Wärtsilä is developing its products not only to meet these needs. The new Wärtsilä 31 with 610 kW per cylinder is a perfect solution for anchor handlers.

Where fuel efficiency, operational flexibility, high power density, long intervals between overhauls, and high levels of safety are of paramount importance.

The aspiration is to be the best, and, with the help of efficient technologies, Wärtsilä intends to remain the most valued business partner in the market.

Maritime gets with the program on cyber security

Shipping's exposure to the NotPetya virus forcefully raised its awareness of the cyber threat. Inmarsat is working hard to ensure that the wake-up call moves an entire industry to action.

Inmarsat

Inmarsat Network Operations Centre

The recently-published UK Government 'Cyber Security Breaches Survey for 2017' of 1,523 private companies indicated that 46% of those canvassed had discovered at least one cyber breach or attack in the past year. Not surprisingly, 74% described cyber security as a high priority. However, few had taken steps to deal with the risk: only a third had a formal cyber security policy, while just 20% of staff had attended any form of cyber security training.

If the lack of preparedness raises alarm, it is trumped by ocean-going shipping – the industry responsible for delivering over 90% of world trade. A comparable Crew Connectivity Survey conducted by Futurenautics in 2017 on behalf of Inmarsat suggested that 87% of ships officers have received no cyber security training whatsoever.

Historically, shipping's lower participation in the Internet of Things offers mitigation, but the vulnerabilities exposed in Maersk APM Terminals systems last year by NotPetya saw a startled industry suddenly wide awake to the threat delivered with new levels of highspeed ship/shore connectivity.

"Cybercrime is an inevitable downside of the digital economy, on land or at sea," said Peter Broadhurst, Senior Vice President of Safety and Security at Inmarsat Maritime, who oversaw the bringing to market of the Fleet Secure cyber security solution in the second half of 2017.

Broadhurst describes Fleet Secure as "the industry's first and - so far only - fully-managed service to detect vulnerabilities, respond to threats and protect ships from cyberattack, isolate infected areas on the network and protect against compromised USBs/devices". Integrated with Inmarsat's highspeed Ka-band/L-band Fleet Xpress, the Unified Threat Management (UTM) service requires no additional outlay on hardware and has no impact on contracted bandwidth.

Fleet Secure is currently undergoing multiple server testing, with a first shipboard installation expected before the end of Q2 2018, says Broadhurst. Inmarsat is also beta testing 'end-point protection', to uphold security through ship network scanning and virus-protection at the user terminal level.

Broadhurst stresses that complacency on cybersecurity is unlikely to be shifted overnight but adds that, already, he has noticed a profound change in attitudes among hardware installers. "It's fair to say that, in the past, there's been a tendency to use default passwords but that has changed rapidly; we continue to reinforce the message with refreshers for our own guys and the installers to reinforce what's been in our training guide all along."

Less easy to address are the systems already in service, and Broadhurst points out that those upgrading connectivity routinely find that ship systems are infected in some way. "Although patching will have cleaned the system in many cases, there may be a little virus sitting in the network, so the first task will be a clean-up.

At the same time, the low crew numbers on board commercial ships today make them heavily reliant on self-managing systems. Broadhurst says that, whether delivered by email attachment or infected USB/device, the software weaknesses in PC network connections therefore give attacks like NonPetya a special kind of potency in the maritime context.

"As the vessel is operating on a satcomms link, updates can often be turned off, with no anti-virus software in place and old versions of Operating Systems in play," Broadhurst explains. It is into this environment that the common 'human errors' seen elsewhere (phishing, plugging an infected USB in, or downloading from untrusted source) are introduced.

"This is why cyber security at sea is not just about software patching and systems configuration; failures in processes and mistakes by people present a significant security loophole." said Broadhurst.

All this makes cyber security training for the world's 1.6 million seafarers a matter of urgency, he added "We are now starting to see a number of maritime focused training courses".

However, getting the training ground rules right will be essential. Broadhurst recently participated in discussions with academics at the World Maritime University in Malmö over what future classroom-based and e-learning cyber security course content might include for Maritime Safety and Security Diploma students.

"Inmarsat is not a training company but clearly we are an interested party in ensuring that cyber risk awareness is high and that training is straightforward. Even where cyber security is being developed, there is still a failure to see how it applies at the individual level. Attitudes such as 'I'm not the target, it can't be me, we have security in place, or I will be protected by Anti-Virus software' remain embedded."

Inmarsat issues guidelines and best practices for crew to follow as standard but "I think that everyone agrees that, ultimately, cyber security training will become part of the STCW [Standards of Training Certification and Watch-keeping] Code requirements; the question now is how best to incorporate it," said Broadhurst.

Inmarsat is party to the Joint Working Group on Cybersecurity run by The International Association of Classification Societies (IACS), whose members classify over 90% of the world's cargo carrying ships for design, construction and through-life regulatory compliance. The satellite group has retained Prof Paul Dorey, Director, CSO Confidential & Visiting Professor, Royal Holloway to act as group facilitator.

Cyber security risk assessments are expected to be included in the 2021 upgrade of the International Maritime Organization's ISM Code (the UN agency's maritime International Safety Management Code). Creating the 'risk map' for ISM will provide a platform to develop training for cyber-safe shipboard operations, Broadhurst says, with a JWG report expected to form the basis of an initial IACS submission on risk assessment to IMO.

The white paper 'Unchartered Waters', written by Professor Dorey for Inmarsat to summarise issues observes: "We don't expect or desire identical standards to be developed everywhere, but consistency of approach to risk management would help a lot." IACS has broken the mapping process down into 12 principles, which include ship design, installation procedures, and support, and is seeking to establish a risk assessment procedure for ships being built today, before developing a practice for retrofitting.

In the interim, Broadhurst says he envisages developing short multi-lingual packages for seafarers which get the cyber risk message across by responding in an interactive way to the choices users made within different storyboard scenarios.

"Cyber training cannot be just a tick in the box; constant reminders and real-life examples are needed to raise awareness because this is often the quickest way to stop bad practice and establish cyber resilience."

"코닉스가 만들면 다릅니다."

KONICS

정확한 어디에서나 압력 측정

헤드형

CE

배선인출형 | DIN 43650-A 커넥터형 | DT04-3P 커넥터형 | M12 커넥터형

고 내구성 스테인레스 압력 전송기

TPS30 Series

- 우수한 내구성으로 고온, 저온, 고압 환경에서 사용 가능
- 플랜트, 중장비, 선박 및 사출장비 등 폭넓은 분야에 적용
- 모든 기체, 액체, 유(油)체 환경에서 사용 가능

- 우수한 내구성으로 고압, 저압 및 고온, 저온 측정 환경에서 사용 가능
  : 고압(0~60MPa), 저압(0~2MPa)
  ※ 압력종류 : 실드게이지압(-0.1~2MPa), 절대압(0~2MPa), 게이지압(0~60MPa)
  : 사용온도 -40~125°C (모델에 따라 다름)
- 플랜트, 중장비, 선박 및 사출장비 등 폭넓은 분야에 적용
- 모든 기체, 액체, 유(油)체 환경에서 사용 가능
- 스테인레스 스틸(SUS316L) 채용으로 우수한 내식성 (단, 헤드형의 헤드부 제외)
- 소형 사이즈로 협소한 공간 사용에 최적
- 1ms의 고속 응답 속도 실현
- 아날로그 출력 : 전압(1-5 VDC), 전류(DC4-20mA)
- 전원 역접속 보호회로 내장
- 다양한 접속 방식 지원
  : 헤드형, 배선인출형, 커넥터형(DIN 43650-A 커넥터형, DT04-3P 커넥터형, M12 커넥터형)
- G3/8, G1/4, R1/2 압력포트 지원
- IP67의 보호구조 실현 (IEC규격)
  (단, DIN43650-A 커넥터형은 IP65)

(주)코닉스

본사 / 공장 / 교정실 : 인천광역시 연수구 벤처로 36번길 37
영업팀 TEL : 032-820-2300 / FAX : 032-813-9981
교정실 TEL : 032-820-2411~4 / FAX : 032-811-9700 / A/S센터 TEL : 032-820-2356~7 / FAX : 032-813-9979

www.konics.co.kr

c UL us CE ISO 9001 KOLAS (인증번호 : KC01 ~ 072)

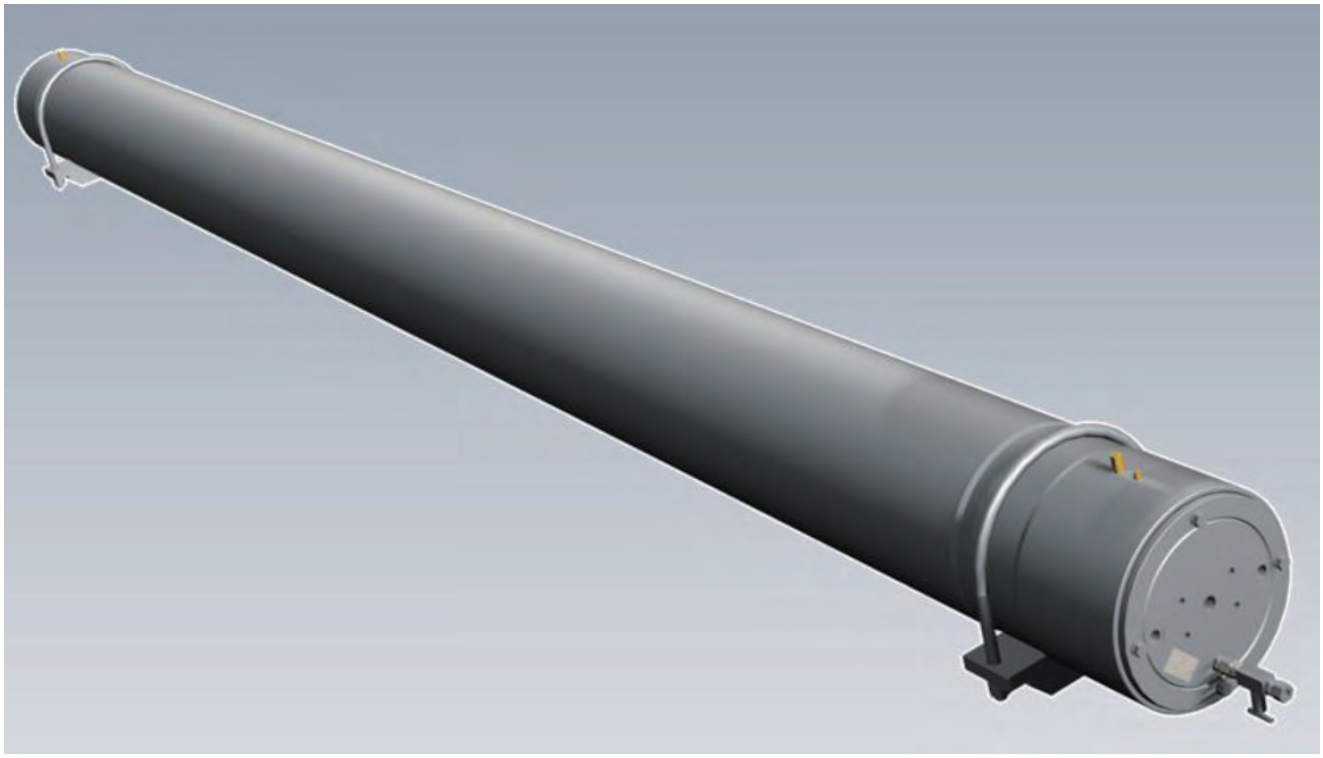

Bosch Rexroth standardized piston accumulator

Standardized piston accumulators with worldwide flexibility

Bosch Rexroth standardized piston accumulator Meeting all global design standards, the Bosch Rexroth standardized range of hydraulic piston accumulators enables high efficiency, long lifetime systems for civil engineering applications everywhere.

Bosch Rexroth

Responding to a growing demand from the civil engineering market, Bosch Rexroth has developed a standardized range of piston accumulators. This new range of products draws on the company's long experience in delivering engineered-to-order systems for demanding offshore applications, but these large hydraulic piston accumulators (HPAs) are also ideal for many types of civil applications. However, the civil engineering market poses a number of challenges. Key

amongst these is the need for more standardized equipment, and particularly for the European market, CE certification.

The new standardized range covers volumes between 100 liters and 1000 liters, with ratings up to 220 bar, bore sizes of in either 360 mm or 500 mm, and lengths of up to 5,500 mm. In addition, all products are fully CE certified. Ensuring highly efficient performance and long lifetime, Bosch Rexroth HPAs employ a unique low loss sealing system and an ultra-smooth cylinder.

Developed in-house, the design features a special surface structure that minimizes friction resulting in a seal friction value of less than one bar. This also reduces vibration and noise during movement, making the systems very quiet. After installation, the accumulator can be filled with a wide range of mineral oils, depending on the application. Customers also have the option of requesting other types of hydraulic fluids.

Bosch Rexroth also provides its own visual piston level indicator, as an optional extra to accompany the accumulator. Clearly readable and easily accessible, the indicator shows the piston's exact position and movement. It also gives customers a single supplier to source a complete solution, helping to maintain equipment quality and reliability. Energized with large volumes of pressurized gas, stored in separate bottles, the new HPAs allow critical systems to continue operation for short periods even during a power failure - an important asset for civil engineering applications.

By using a 'standardized' approach, the piston accumulators can be delivered when required, yet can be easily tailored to the specific needs of individual applications. For example, they can be easily customized for higher pressures, such as the 350 bar typically required by industrial systems.

What's more, to satisfy customer requirements for very high pressure piston accumulators, the Bosch Rexroth plant in Boxtel, the Netherlands can also build custom solutions to ASME U, U2 and even U3 certification. ASME Certification is a mark of quality and safety for pressure vessels, demonstrating the engineering and construction of the product is to the highest standard. As HPAs hold fluid on one side and gas on the other, using pressure to store potential energy, they are a type of pressure vessel. ASME U represents equipment certification up to 207 bar pressure, U2 up to 685 bar, while the highest level U3 is for unlimited pressure usually for special gases and extremely high pressure applications. Bosch Rexroth is one of the very few hydraulic component manufacturers in the world to offer this, and the only one in the Netherlands with U3 certification.

"Offering CE certification and ASME U stamp for hydraulic piston accumulators allows us to meet the needs of customers globally. We can support all applications needing hydraulic accumulators - big vessels and high pressure - with large diameter up to 1 m and lengths of several meters," says Peter Venhuizen, Manager Concept Engineering of Bosch Rexroth.

"Our standard range of HPAs offers customers complete flexibility, with a wide range of possibilities. Due to our extensive experience with different certifying authorities, we can meet every design standard worldwide, to support a wide variety of markets and pressure demands."

About Bosch Rexroth

Economical, precise, safe, and energy efficient: drive and control technology from Bosch Rexroth moves machines and systems of any size. The company bundles global application experience in the market segments of Mobile Applications, Machinery Applications and Engineering, and Factory Automation to develop innovative components as well as tailored system solutions and services. Bosch Rexroth offers its customers hydraulics, electric drives and controls, gear technology, and linear motion and assembly technology all from one source. With locations in over 80 countries, more than 31,100 associates generated sales revenue of approximately $5.99 billion (5.4 billion euros) in 2015.

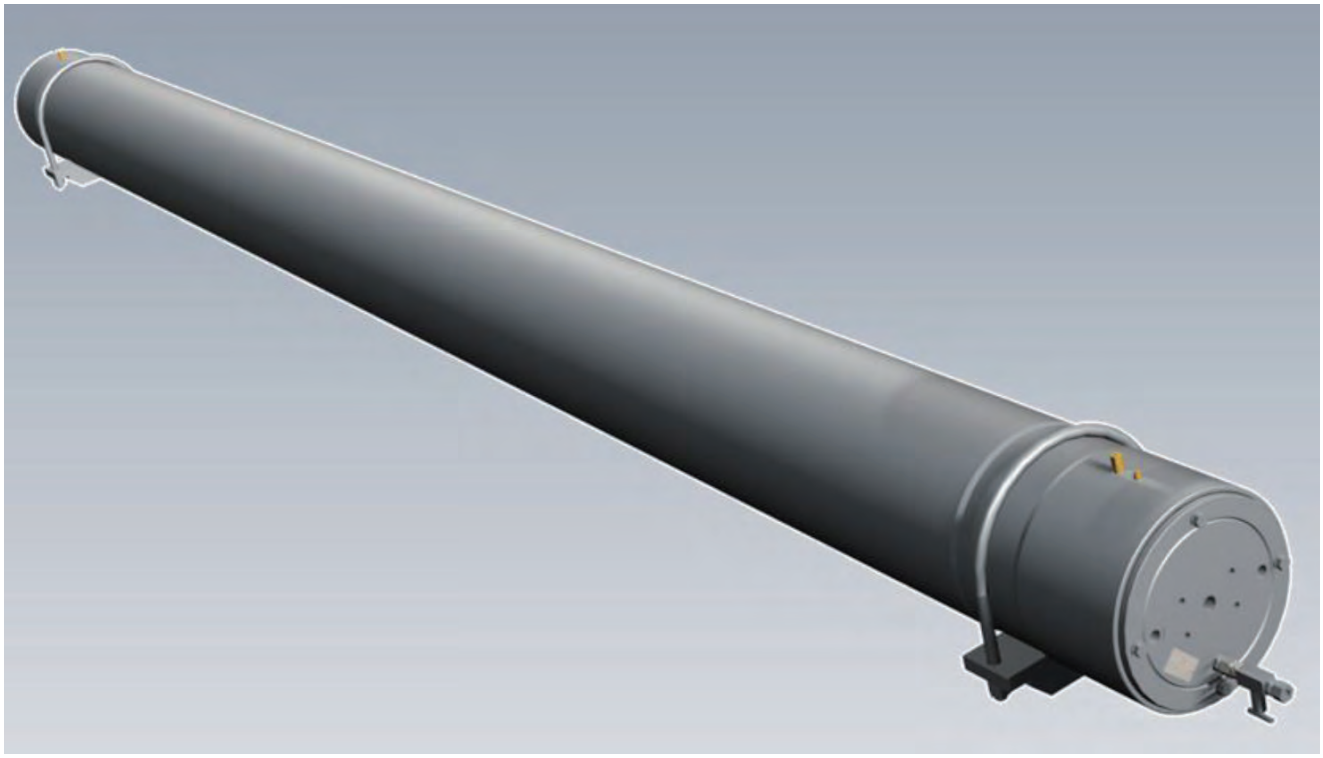

Bosch Rexroth의 표준화된 피스톤 축압기

유연성이 우수한 표준화된 피스톤 축압기

전 세계의 모든 설계 기준을 충족하는 Bosch Rexroth가 개발한 표준화된 범위의 유압식 피스톤 축압기는 어디서나 토목관개수리기술(civil engineering) 용도를 위한 고효율 장수명 시스템을 가능하게 한다.

보쉬렉스로스

토목관개수리기술(civil engineering) 시장의 증가하는 요구에 대처하기 위해 Bosch Rexroth는 표준화된 범위의 피스톤 축압기를 개발했다. 이 새로운 범위의 제품은 까다로운 해양 용도를 위한 주문 후 제작방식(engineered-to-order) 시스템을 공급한다. Bosch Rexroth의 오랜 경험이 응축된 이 대형 유압식 피스톤 축압기(HPA)는 많은 유형의 토목관개수리 기술 용도에도 적합하다. 그러나 토목관개수리기술 시장에서는 해결해야 할 많은 과제가 제기되고 있다. 이 중에서 핵심은 더 표준화된 장비의 필요성이며, 특히 유럽 시장에서의 CE 인증이다.

새로운 표준화된 범위는 최대 220bar의 정격, 360mm 또는 500mm의 보어 크기 및 최대 5,500mm의 길이와 함께 100~1000리터의 체적을 포함한다. 또한 모든 제품은 CE 인증을 받았다. 고효율 성능과 긴 수명을 보장하는 Bosch Rexroth HPA는 독특한 저손실 밀봉 시스템과 울트라 스무드 실린더를 사용한다. 내부적으로 개발한 설계는 마찰을 최소화해 씰(seal) 마찰 값을 1bar 미만으로 낮추는 특수 표면 구조가 특징이다.

마찰의 최소화는 운동 중 진동과 소음도 줄여 시스템을 매우 조용하게 만든다. 설치 후 축압기에는 용도에 따라 다양한 종류의 광물성 작동유를 채울 수 있는데, 다른 유형의 유압 작동유가 옵션으로 제공된다.

Bosch Rexroth는 축압기에 동반되는 추가 옵션으로 시각적 피스톤 레벨 표시기도 제공한다. 명확하게 판독할 수 있고 쉽게 접근할 수 있는 시각적 피스톤 레벨 표시기는 피스톤의 정확한 위치와 운동을 보여준다. 또한 Bosch Rexroth는 완전한 솔루션을 제공하는 단일 공급자를 고객에게 추천해 장비 품질과 신뢰성을 유지하도록 돕는다. 다량의 가압 가스(별도의 용기에 보관)로 구동되는 새로운 HPA는 토목관개수리 용도의 중요한 자산으로 전원 차단 중에도 중요한 시스템의 작동을 단기간 지속할 수 있다.

'표준화된' 접근의 사용을 통해 피스톤 축압기는 필요할 때 공급할 수 있으며 개별 용도의 특정 필요성에 쉽게 맞춤화 할 수 있다. 예를 들어 피스톤 축압기는 산업 시스템이 대표적으로 요구하는 350 bar와 같은 높은 압력에 쉽게 맞춤화 할 수 있다.

게다가 초고압 피스톤 축압기의 고객 요구사항을 충족하기 위해 네덜란드 복스텔의 Bosch Rexroth 플랜트는 ASME U, U2 및 심지어 U3 인증을 충족하는 맞춤형 솔루션을 만들 수도 있다. ASME 인증은 제품의 설계와 제작이 최고 표준이라는 것을 입증하는 고압 용기의 품질과 안전에 대한 마크다. HPA는 한 쪽에 유체를 다른 쪽에 가스를 보유하고 압력을 사용해 위치 에너지를 저장하기 때문에 압력 용기의 유형에 해당한다. ASME U는 최대 207 bar 압력에 대한 장비 인증을 나타내고 U2는 최대 685 bar 압력에 대한 인증을 의미하는 반면, 최고 수준 U3는 특수 가스와 매우 높은 압력 용도에 일반적인 무제한 압력에 대한 인증이다. Bosch Rexroth는 이런 인증을 획득한 전 세계에서 몇 안 되는 유압 부품 제조업체 중 하나이며 네덜란드에서 U3 인증을 획득한 유일한 회사다.

"유압식 피스톤 축압기의 CE 인증 및 ASME U 마크 획득으로 우리는 전 세계 고객의 요구를 충족할 수 있다. 우리는 최대 1 m의 큰 지름과 몇 미터의 길이에 달하는 유압식 축압기(큰 용기와 높은 압력)가 필요한 모든 용도를 지원할 수 있다"고 Bosch Rexroth의 Concept Engineering 매니저인 Peter Venhuizen은 말했다.

"우리의 표준 범위 HPA는 고객에게 광범위한 가능성과 함께 완전한 유연성을 제공한다. 다양한 인증 기관에서 축적한 우리의 광범위한 경험으로 인해 Bosch Rexroth는 전 세계의 모든 설계 기준을 충족하며 광범위한 시장과 압력 요구를 지원할 수 있다."

About 보쉬렉스로스

경제적이고 정확하며, 안전하고 에너지 효율적인 보쉬렉스로스의 드라이브 및 제어 기술은 전산업분야에 활용되고 있다. 보쉬렉스로스는 모바일 응용 프로그램, 기계 응용 프로그램 및 엔지니어링, 공장 자동화 분야의 글로벌 리더로서 혁신적인 제품 및 맞춤형 시스템 솔루션, 그리고 서비스까지 포괄한다. 보쉬렉스로스는 고객에게 유압 장치, 전기 구동 장치 및 제어 장치, 기어 기술 및 선형 모션 및 조립 기술을 모두 원 소스로 제공하고 있다. 현재 80여 국가에 지사를 두고 있으며 31,100명 이상의 직원이 근무하고 있다. 2015년 기준 약 59.9억 달러(54억 유로)의 매출을 기록했다.

ABB to equip high-spec service operations vessel for the world's largest offshore wind farm

ABB technology allowing integration of batteries receives major vote of confidence as Louis Dreyfus Armateurs orders second wind farm service vessel featuring a wide scope of ABB's solutions.

Maritime transportation group Louis Dreyfus Armateurs (LDA) will add a second 83 meter windfarm service operation vessel (SOV) to its fleet, featuring an extensive range of ABB's technology, with the award-winning power distribution system Onboard DC Grid™ at its core. The vessel will support operations at Hornsea Project Two off the UK coast, which, upon completion in 2022, will become the world's biggest wind farm capable of powering over 1.3 million homes.

ABB's Onboard DC Grid™ enables simple, flexible and functional integration of energy sources, such as batteries and fuel cells, and empowers the efficiencies associated with variable speed generator operation.

In addition to Onboard DC Grid™, the ABB scope of supply includes tunnel thrusters, generators, transformers, batteries, ABB Ability™ Marine Advisory System – OCTOPUS and ABB's Remote Diagnostics Services. ABB will also provide its Power and Energy Management System (PEMS), which allows battery power to act as backup for running generators, again cutting the need to run spare capacity, and reducing maintenance and fuel consumption in the long-term.

"LDA is positioning itself at the forefront of the wind farm service sector in vessel performance and efficiency," said Hervé Lapierre, Head of New building Department at LDA. "Wind farm service requirements are still evol ving, meaning that SOVs built for this market, in ad dition to being cost-effective, need to also be innovative and flexible."

Onboard DC Grid™ solution enables variable speed technology to dynamically optimize system energy use in line with the load situation, which results in a 20% cut in fuel consumption. Power from the dual batteries on board will be introduced to maximize efficiency, and the energy stored can come from a variety of sources, including renewables. DC distribution also provides a unique platform for digital solutions, so that data from equipment sensors can be transmitted between systems instantaneously, and bridge or shore-based systems can monitor and optimize vessel performance.

"The second order from LDA feels like a validation of the performance, cost efficiency and safety that ABB delivers through its 'Electric. Digital Connected' approach," said Juha Koskela, Managing Director, ABB Marine & Ports. "We are proud to deliver the technology that enables the use of stored energy for a vessel supporting the renewables industry."

The vessel, designed by Salt Ship Design, will be built at Turkey's CEMRE Shipyard. Like its predecessor, ordered in 2017, the second LDA vessel will be on contract with Ørsted A/S, the largest energy company in Denmark.

대우조선해양, 그리스 포시도니아 박람회에서 선박 수주 성공

대우조선해양은 그리스 알파가스(Alpha Gas S.A.)로부터 LNG운반선 1척을 수주했다고 밝혔다. 이는 지난 3월 계약한 선박의 옵션물량이다. 그리고 다른 해외선주로부터 초대형원유운반선 2척을 추가 수주했다. 이들 선박의 총 계약 규모는 약 3.7억 달러 규모다. LNG운반선은 2021년 상반기, 초대형원유운반선은 2020년 1분기에 선주측에 각각 인도될 예정이다.

이번에 수주한 LNG운반선은 173,400㎥급 대형 LNG운반선으로 대우조선해양이 자랑하는 천연가스 추진 엔진(ME-GI)과 완전재액화시스템 FRS(Full Re-liquefaction System)가 탑재돼 기존 LNG운반선 대비 연료 효율은 30%가량 높아지고, 오염물질 배출량은 30%이상 낮출 수 있다.

클락슨 리포트에 따르면 대우조선해양은 올해 현재까지 전 세계에서 가장 많은 LNG운반선(9척)과 초대형원유운반선(15척)을 수주한 조선소다. 이미 경쟁력이 입증된 LNG운반선에 이어 초대형원유운반선 분야에서도 최강자로 자리매김했다는 평가다.

대우조선해양 관계자는 "재무구조가 개선되고, 경영진 선임 건이 확정되면서 선주들의 대우조선해양에 대한 신뢰가 더 커진 상황"이라고 말했다.

대우조선해양은 올해 LNG운반선 9척, 초대형원유운반선 15척, 특수선 1척 등 총 25척 약 30억 달러 상당의 선박을 수주해 올해 목표 73억 달러의 약 41%를 달성했다. 이는 지난해 같은 기간 수주금액 8.1억 달러 대비 3.7배 이상 증가한 실적이다.

삼성중공업, 셔틀탱커 4척 수주

삼성중공업은 세계 최대 유조선사 중 하나인 싱가포르 AET로부터 152,700 DWT 수에즈막스급 셔틀탱커 4척을 약 3억 6,000만 달러에 수주했다고 지난 6월 1일 밝혔다. 셔틀탱커는 해양플랜트에서 생산한 원유를 해상에서 선적해, 육상 저장기지까지 실어 나르는 선박으로 유럽의 북해와 바렌츠해, 캐나다 동부, 브라질 등 해상 유전지대에 주로 투입된다.

삼성중공업은 1995년 국내 조선업계 최초로 셔틀탱커를 건조하며 시장을 선도해 왔다. 이번 수주를 포함해 삼성중공업은 현재까지 전세계에서 발주된 셔틀탱커 130척 가운데 56척을 수주함으로써 시장 점유율 43%로 세계 1위를 유지하고 있다. 특히 지난 해와 올해 발주된 셔틀탱커 11척 전량을 수주했고, 2010년 이후 세계 시장의 2/3(50척 중 34척, 68%)를 장악하며 압도적인 품질 경쟁력을 입증하고 있다.

삼성중공업이 이번에 수주한 셔틀탱커는 높은 파도와 바람, 조류의 영향을 받는 해상에서 일정한 위치를 유지하며 해양플랜트 설비에 안정적으로 연결할 수 있도록 최첨단의 위치제어장치(Dynamic Positioning System)를 장착할 예정이다. 또한 해양 생태계의 교란을 막기 위한 선박평형수 처리시스템을 적용하고, 운항시

발생하는 질소산화물(NOx) 등의 오염물질 배출 규제인 국제해사기구(IMO)의 'Tier Ⅲ'를 충족하도록 친환경 선박으로 건조하게 된다.

삼성중공업 관계자는 "AET로부터 수주한 셔틀탱커는 수년간 발주 수요가 없었던 브라질 해역에 투입될 예정으로 향후 남미 지역에서도 추가 발주가 기대된다"며, "앞선 기술력과 건조 경험을 바탕으로 셔틀탱커 시장을 계속 선도해 나갈 것"이라고 말했다.

한편 이번 계약을 포함해 삼성중공업은 올해 총 24척, 23억 달러 수주 실적을 기록 중이다.

AUTOMA

1992년 창립 이래 자동밸브를 공급해 온 오토마!
이제 콘트롤밸브로 고객의 가치 창조에 한 걸음 더 나아가겠습니다.

All about Automatic Valves & Accessories

최고의 품질, 최상의 서비스, 폭넓은 경험으로 고객의 요구에 최선을 다하겠습니다.

AUTOMA
Automatic Valve & Accessories

주식회사 오토마
· 본사/공장 : 경기도 부천시 원미구 평천로 862번길 21 (도당동 72-6)
· Tel : 032-653-6477 · Fax : 032-653-6478
· http://www.automa.co.kr · 이메일 : automa@automa.co.kr

견적 및 구매 문의
(032)653-6477

According to Clarkson, global orders stood at 1 million CGT with 35 vessels in May this year. Out of that, Korean shipyards received orders amounting to 550,000 CGT with 15 vessels, thus outperforming Chinese shipyards (250,000 CGT with 13 vessels) by a large margin. Although there is no significant difference in the number of vessels ordered at Korean shipyards (15 vessels) and Chinese shipyards (13 vessels), Korean shipyards outstripped Chinese shipyards by more than two-fold in terms of CGT which reflects the man hour, ship price, value-added, etc., which are involved in the construction of vessels.

As global shipbuilding industry is showing signs of recovery, the cumulative shipbuilding orders from January to May over the recent 3 years continued the upward trend, reaching 6.08 million CGT in 2016 and rising to 8.64 million CGT in 2017 and 10.07 million CGT in 2018.

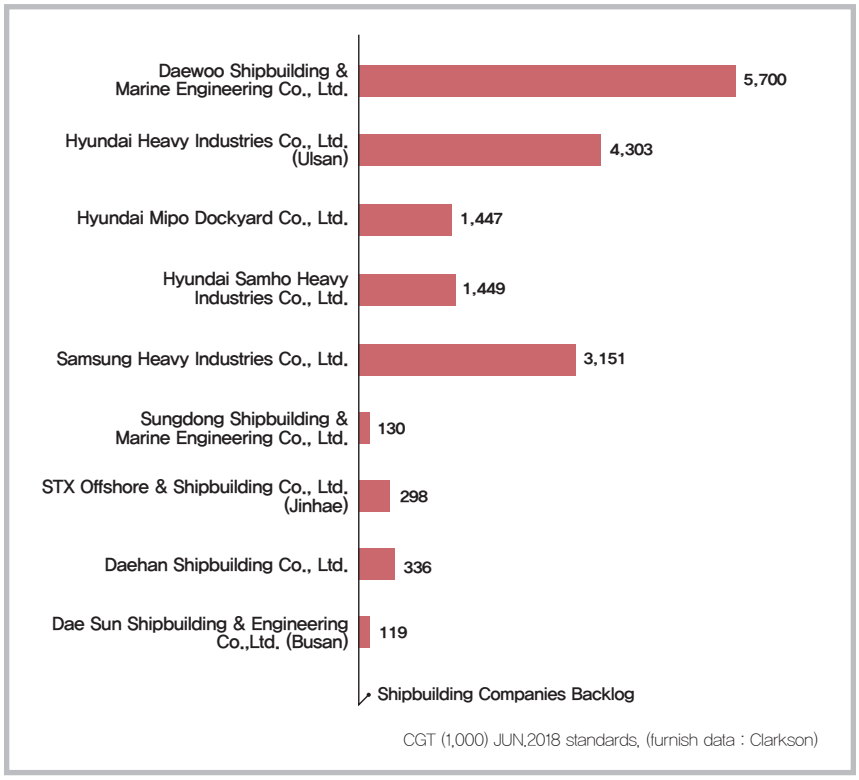

Here, we take a close look at the performance of major domestic shipyards, the world's leading players with strong growth in new orders as shown currently in the Clarkson data, such as Hyundai Heavy Industries (HHI), Daewoo Shipbuilding & Marine Engineering (DSME), Samsung Heavy Industries (SHI) and others based on the order backlog data.

Photo: Samsung Heavy Industries Co., Ltd.

Korea Shipbuiling Orders awarded to domestic shipyards in 2015~2018

Data		Type	Number of vessel	Amount	Ship owner	Delivery	Shipyard
2015	Jan	174,000m³ LNG carriers	2 vessels	USD 400 million	Korea Line Corporation, Korea	The end of 2017	Daewoo Shipbuilding & Marine Engineering
		174,000m³ LNG carriers	2 vessels	USD 400 million	Hyundai LNG Shipping, Korea	The end of 2017	Daewoo Shipbuilding & Marine Engineering
		19,200 TEU container ships	3 vessels	USD 450 million	Scorpio Group, Monaco	-	Samsung Heavy Industries
		LNG carriers	2 vessels	USD 416 million	SK shipping, Korea	The end of 2017	Samsung Heavy Industries
		319,000 DWT VLCCs	2 vessels	USD 198 million	Maran Tankers Management, Greece	-	Daewoo Shipbuilding & Marine Engineering
	Feb	158,000 tons oil tankers	5 units (2 optional vessels)	USD 330 million	-	2017s	Sungdong Shipbuilding & Marine Engineering
		174,000m³ LNG carriers	1 vessel	USD 200 million	-	-	Daewoo Shipbuilding & Marine Engineering
		74,000 DWT oil products carriers	2 units (1 optional vessels)	USD 46 million	Valles Steamship, Hong Kong	-	STX Offshore & Shipbuilding
		300,000 DWT VLCCs	2 vessels	USD 192 million	Metrostar Management, Greece	The end of 2016	Hyundai Heavy Industries
		1,800 TEU container ships	4 units (2 optional vessels)	-	Cosmoship Management S.A, Greece	-	Dae Sun Shipbuilding & Engineering
		180,000m³ LNG carriers	1 vessel	-	Mitsui O.S.K Lines, Japan	2018s	Daewoo Shipbuilding & Marine Engineering
	Mar	38,000m³ liquefied petroleum gas and ammonia carriers	2 vessels	-	Asian ship owner	-	Hanjin Heavy Industries & Construction
		20,100TEU container ships	4 vessels	USD 619.57 million	Mitsui O.S.K Lines, Japan	2017. August	Samsung Heavy Industries
		LR1 tankers	2 vessels	KRW 320 billion	BW, Singapore	2016 ~ 2017	STX Offshore & Shipbuilding
	Apr	319,000 DWT VLCCs	2 vessels	USD 198 million	Maran Tankers Management, Greece	The end of 2016	Daewoo Shipbuilding & Marine Engineering
		20,600 TEU container ships	3 vessels	-	CMA CGM, France	The end of 2017	Hanjin Heavy Industries & Construction (HHIC)-Phil's Subic Shipyard
		21,100 TEU container ships	6 vessels	USD 950 million	OOCL, Hong Kong	The end of 2017	Samsung Heavy Industries
		10,500 TEU container ships	5 vessels	-	Hapag-Lloyd, Germany	-	Hyundai Samho Heavy Industries
		Pure Car/Truck Carriers	2 vessels	USD 130 million	Norwegian Car Carriers, Norway	The end of 2016	Hyundai Samho Heavy Industries
		11,000 TEU container ships	6 vessels	-	Asian and European ship owners	2016 ~ 2017	HHIC-Phil's Subic Shipyard
	May	156,000 tons oil tankers	2 vessels	-	Maran Tankers Management, Greece	-	Daewoo Shipbuilding & Marine Engineering
		5,200 ton training vessel	1 vessel	-	-	-	Hanjin Heavy Industries & Construction
		74,000 tons LR1 tankers	8 units (4 optional vessels)	USD 375 million	Marshall Islands-based ship owners	The end of 2016	STX Offshore & Shipbuilding
	Jun	300,000 DWT VLCCs	10 units (5 optional vessels)	USD 1 billion	The National Shipping Company of Saudi Arabia	2017s	Hyundai Samho Heavy Industries
		19,630 TEU container ships	11 vessels	USD 1.1 billion	Maersk Line A/S, Denmark	2018s	Daewoo Shipbuilding & Marine Engineering
		Tankers	2 vessels	-	Arcadia Shipmanagement, Greece	-	Hyundai Heavy Industries
		300,000 DWT VLCCs	6 units (4 optional vessels)	USD 540 million	John Fredriksen	-	STX Offshore & Shipbuilding
		174,000 CBM LNG carriers	3 units (1 optional vessels)	-	Teekay LNG Partners, Canada	First quarter of 2019	Hyundai Samho Heavy Industries
		155,000 DWT tankers	3 vessels	USD 330 million	-	2018. February	Samsung Heavy Industries
		84,000m³ VLGCs	4 vessels	USD 320 million	China Peace, China	-	Daewoo Shipbuilding & Marine Engineering
	Jul	173,400m³ LNG Carriers	1 vessel	USD 195 million	Chandris, Greece	The end of 2018	Daewoo Shipbuilding & Marine Engineering
		14,000 TEU container ships	9 vessels	USD 1.1 billion	Maersk Line A/S, Denmark	2017	Hyundai Heavy Industries
	Aug	Product Carriers	4 vessels	USD 144 million	Scorpio Tankers, U.S.A	The first of 2017	Hyundai Mipo Dockyard
	Sep	84,000m³ LPG Carriers	2 vessels	-	Asia ship owner	2017s	Daewoo Shipbuilding & Marine Engineering
		74,000 tons LR1 tankers	4 units (2 optional vessels)	-	Greece ship owner	The second half of 2017	STX Offshore & Shipbuilding
	Oct	173,400m³ LNG Carriers	2 vessels	USD 400 million	BW Group, Singapore	The first half of 2019	Daewoo Shipbuilding & Marine Engineering
		84,000m³ LPG carriers	2 vessels	-	Asia ship owner	2017s	Daewoo Shipbuilding & Marine Engineering
	Nov	319,000 tons VLCCs	2 vessels	-	Maran Tankers Management, Greece	2017s	Daewoo Shipbuilding & Marine Engineering
	Dec	114,000 tons products carriers	2 vessels	-	Sea Tankers Group	2017. September	Daehan Shipbuilding
	Feb	158,000 DWT oil products carriers	2 vessels	-	Ditas Shipping, Turkey	2018s	Hyundai Heavy Industries
	May	40,000 DWT products carriers	2 vessels	-	Greece ship owner	-	Hyundai Mipo Dockyard
		159,000 DWT oil tankers	2 vessels	-	AMPTC, Kuwait	2018s	Hyundai Heavy Industries
	Jun	75,000 tons product carriers	4 vessels	USD 170 million	Tsakos, Greece	The first of 2018	Sungdong Shipbuilding & Marine Engineering
		180,000m³ LNG carriers	2 vessels	USD 400 million	SK E&S, Korea	The first of 2019	Hyundai Heavy Industries
		50,000 tons bulk carrier	1 vessels	-	Ilshin Marine Transport, Korea	The end of 2017	Hyundai Mipo Dockyard
	Jul	31,000 tons Car ferry	1 vessels	-	Weidong Ferry	The end of 2018	Hyundai Mipo Dockyard
	Sep	180,000m³ LNG carriers	2 vessels	USD 367 million	Europe ship owner	-	Samsung Heavy Industries
	Oct	2,800 ton convoy	1 vessel	USD 297 million	Korean Navy	The end of 2020	Daewoo Shipbuilding & Marine Engineering
		2,600 ton frigates	2 vessels	USD 324 million	Department of National Defense, Philippines	2020s	Hyundai Heavy Industries
		Patrol killer medium	3 vessels	USD 173 million	Korean DAPA	2019s	Hanjin Heavy Industries & Construction

	Oct	157,000 DWT oil tankers	2 vessels	USD 220 million	Viken, Norway	-	Samsung Heavy Industries
		113,000 DWT oil tankers	2 vessels				
		157,000 DWT oil tankers	3 vessels	USD 170 million	Nordic American Tankers Limited, Norway	-	Samsung Heavy Industries
	Dec	14,500 TEU container ships	4 vessels	USD 700 million	IRISL, Iran	2th quarter 2018	Hyundai Heavy Industries
		49,000 tons products carriers	6 vessels				Hyundai Mipo Dockyard
		LNG Bunkering Vessel	1 vessel	-	Bernhard Schulte, Germany	The end of 2018	Hyundai Mipo Dockyard
2017	Jan	114,000 tons product carriers	2 vessels	-	SFL, France	3th quarter of 2019	Daehan Shipbuilding
		50,000 tons oil tankers	1 vessel	-	Fukujin Kisen, Japan	-	Hyundai Mipo Dockyard
	Feb	RO-RO Ship	2 vessels	USD 117.8 million	CLdN, Luxembourg	The first of 2017	Hyundai Mipo Dockyard
		50,000 DWT product carriers	1 vessel	-	Greece ship owner	-	Hyundai Mipo Dockyard
		300,000 DWT VLCCs	2 vessels	-	Enesel, Greece	The end of 2018	Hyundai Heavy Industries
	Mar	173,400m³ LNG carriers	2 vessels	-	Europe ship owner	The end of 2019	Daewoo Shipbuilding & Marine Engineering
		114,000 tons oil tankers	4 vessels	USD 240 million	Sovcomflot, Russia	3th quarter of 2018	Hyundai Samho Heavy Industries
		21,000m³ LPG carriers	2 vessels	-	Solvang ASA, Norway	2019s	Hyundai Samho Heavy Industries
	Apr	VLCCs	1 vessel	-	Neda Maritime, Greece	2019s	Hyundai Samho Heavy Industries
		318,000 tons VLCCs	3 vessels	USD 250 million	Maran Tankers Management, Greece	2018s	Daewoo Shipbuilding & Marine Engineering
	May	300,000 DWT VLCCs	2 vessels	-	Sentek Marine, Singapore	The first of 2019	Hyundai Samho Heavy Industries
		VLCCs	4 vessels	-	Oceania ship owner	The first of 2019	Samsung Heavy Industries
		11,200 DWT product oil & chemical tanker	3 vessels	-	Korea ship owner	The end of 2018	STX Offshore & Shipbuilding
		7,500m³ LNG carriers	2 vessels	USD 100 million	Korea Line, Korea	The end of 2019	Samsung Heavy Industries
	Jun	114,000 DWT oil tankers	2 vessels	-	Metrostar Management, Greece	The end of 2018	Daehan Shipbuilding
		RO-RO Ship	2 vessels	USD 117.8 million	CLdN, Luxembourg	The end of 2019	Hyundai Mipo Dockyard
	Jul	318,000 tons VLCCs	4 vessels	-	Maran Tankers Management, Greece	-	Daewoo Shipbuilding & Marine Engineering
	Aug	84,000m³ LPG carriers	2 vessels	-	Vitol	The first of 2019	Hyundai Heavy Industries
	Sep	300,000 tons VLCCs	5 vessels	USD 420 million	Hyundai Merchant Marine, Korea	The first of 2019	Daewoo Shipbuilding & Marine Engineering
		81,000 DWT bulk carriers	4 vessels	USD 120 million	Bahri, Saudi Arabia	The first of 2020	Hyundai Mipo Dockyard
		325,000 tons VLCCs	10 vessels	USD 800 million	Polaris Shipping, Korea	The first of 2021	Hyundai Heavy Industries
	Oct	325,000 tons VLCCs	5 vessels	USD 400 million	Polaris Shipping, Korea	The first of 2021	Hyundai Heavy Industries
	Dec	LNG carriers	1 vessel	-	Greece, Maran Gas Maritime	-	Daewoo Shipbuilding & Marine Engineering
		300,000 DWT VLCCs	1 vessel	-	Greece, Enesel	-	Hyundai Heavy Industries
		300,000 DWT VLCCs	1 vessel	-	Korea, Hyundai Glovis	-	Hyundai Heavy Industries
		VLCCs	1 vessel	-	Greece, Aeolos	-	Daewoo Shipbuilding & Marine Engineering
		180,000m³ LNG carriers	1 vessel	USD 190 million	-	-	Samsung Heavy Industries
2018	Jan	174,000m³ LNG carriers	1 vessels	-	Russia, Sovcomflot	2020s	Hyundai Samho Heavy Industries
	Feb	170,000m³ LNG carriers	2 vessels	USD 370 million	-	The first of 2020	Daewoo Shipbuilding & Marine Engineering
		84,000m³ VLGCs	3 vessels	USD 220 million	KOTC, Kuwait	2019s	Hyundai Heavy Industries
		12,000 TEU container ships	8 vessels	USD 770 million	Asian ship owner	The first of 2021	Samsung Heavy Industries
	Mar	173,400m³ LNG carriers	2 vessels	USD 370 million	Oceania ship owner	The first of 2021	Daewoo Shipbuilding & Marine Engineering
		180,000m³ LNG carriers	1 vessel	-	-	-	Samsung Heavy Industries
	Apr	VLCCs	2 vessels	USD 260 million	Korea Line, Korea	The end of 2019	Daewoo Shipbuilding & Marine Engineering
		VLCCs	1 vessel		Europe ship owner	The end of 2019	
		VLCCs	2 vessels	-	U.S.A ship owner	First quarter of 2020	Daewoo Shipbuilding & Marine Engineering
		174,000m³ LNG Carriers	2 vessels	USD 370 million	-	July and October 2020	Samsung Heavy Industries
	Jun	152,700 DWT tankers	4 vessels	USD 360 million	Singapore, AET	-	Samsung Heavy Industries
		173,400m³ LNG carrier	1 vessel	USD 370 million	Greece, Alpha Gas S.A.	The first of 2020	Daewoo Shipbuilding & Marine Engineering
			2 vessels		-		

*Note : Based on the press release and public announcements of each shipyards, internal estimation of Monthly KORSHIP (estimation until Jun 15, 2018)

Offshore plant orders awarded to domestic shipyards in 2011-2017

Data		Type	Number of vessel	Amount	Ship owner	Delivery	Shipyard
2011	Jul	Drillship	2 vessels	USD 1.1225 billion	Maersk, Denmark	July 2014	Samsung Heavy Industries
	Aug	LNG-FSRU	1 vessel	USD 280 million	Excelerate Energy, U.S.A	First quarter of 2014	Daewoo Shipbuilding & Marine Engineering
	Sep	Semi-submersible Rig	2 units	USD 1.1 billion	Songa Offshore, Norway	Second hallf of 2014	Daewoo Shipbuilding & Marine Engineering
		Well Intervention Vessel	2 vessels	USD 420 million	Eide Marine Services AS, Norway	2013	STX Finland
		Drillship	1 vessel	KRW 600 billion	Noble Drilling, U.S.A	Second half of 2014	Hyundai Heavy Industries
	Oct	Fixed Offshore Platform	-	USD 1.4 billion	Chevron, U.S.A	Second half of 2014	Daewoo Shipbuilding & Marine Engineering
		Drillship	1 unit	USD 550 million	Offshore drilling company, Americas	-	Daewoo Shipbuilding & Marine Engineering
		Platform Supply Vessel	1 unit	-	Troms Offshore Supply AS, Norway	First half of 2013	STX OSV
		Offshore Plant Module	2 units	-	-	From 2013 to 2014	STX OSV
		Platform Supply Vessel	4 units	KRW 2 trillion	Island Offshore, Norway	Consecutively from the 3rd quarter	of 2013 to the 1st quarter of 2014
	Nov	Pipe Laying Support Vessel	2 units	USD 500 million	Odebrecht, Brazil	August of 2014	Daewoo Shipbuilding & Marine Engineering
	Dec	Offshore facilities (Gas platform and various facilities)	-	USD 900 million	Major multinational oil companies	2nd half of 2014	Hyundai Heavy Industries
2012	Jan	CPF (Central Processing Facility)	-	KRW 2.6 trillion	INPEX, Australia	4th quarter of 2015	Samsung Heavy Industries
		Semi-submersible rig	1 unit	USD 620 million	Odfjell, Norway	by mid 2014	Daewoo Shipbuilding & Marine Engineering
	Feb	LNG-FSRU	-	-	Hoegh, Norway	-	Hyundai Heavy Industries
	Mar	Offshore Platform	1 unit	USD 560 million	DONG E&P A/S, Danish	April 2015	Daewoo Shipbuilding & Marine Engineering
		FPSO	1 unit	USD 2.0 billion	INPEX, Australia	April 2016	Daewoo Shipbuilding & Marine Engineering
	Apr	Drillship	1 vessel	USD 645 million	Ensco plc	Third quarter 2014	Samsung Heavy Industries
	May	Semi-submersible Drilling Rig	2 units	USD 1.1 billion	Songa Offshore, Norway	Mid 2015	Daewoo Shipbuilding & Marine Engineering
		Drillship	1 vessel	USD 600 million	Seadrill, Norway	Second half of 2014	Samsung Heavy Industries
		Drillship	1 vessel	USD 655 million	Diamond Offshore Drilling Limited., U.S.A	4th quarter of 2014	Hyundai Heavy Industries
	Jun	Semi-submersible drilling rig	1 unit	USD 700 million	Fred Olsen Energy, Norway	March 2015	Hyundai Heavy Industries
		LNG-FPSO	1 unit	-	Petroliam Nasional Berhad, Malaysia	June 2015	Daewoo Shipbuilding & Marine Engineering
	Jul	Drillship	1 vessel	USD 645 million	Ensco plc	-	Samsung Heavy Industries
		Gas Compression Platform	1 unit	USD 420 million	(Letter of Award)	Second half of 2015	Hyundai Heavy Industries
	Aug	LNG-FSRU	8 vessels	-	Excelerate, U.S.A	Between early 2015~2017	Daewoo Shipbuilding & Marine Engineering
	Sep	Drillship	1 vessel	USD 620 million	Rowan, U.S.A	First half of 2015	Hyundai Heavy Industries
		Drillship	1 vessel	USD 623 million	-	-	Samsung Heavy Industries
	Oct	Drillship	4 vessels	USD 2.06 billion	Transocean, U.S.A	One-by-one from mid 2015	Daewoo Shipbuilding & Marine Engineering
		Drillship	1 vessel	USD 560 million	Atwood Oceanics, U.S.A	-	Daewoo Shipbuilding & Marine Engineering
		LNG-FSRU	1 vessel	USD 270 million	Hoegh LNG, Norway	First half of 2015	Hyundai Heavy Industries
	Nov	Drillship	1 vessel	USD 700 million	-	2nd half of 2015	STX Offshore & Shipbuilding
	Dec	offshore platform (Top side)	1 unit	USD 1.77 billion	Statoil, Norway	The end of 2016	Daewoo Shipbuilding & Marine Engineering
2013	Jan	Gas Production Platform (topside)	1 unit	USD 1.1 billion	Statoil, Norway	Mar 2016	Hyundai Heavy Industries
		LNG-FSRU	1 vessel	-	BW Maritime, Singapore	2015	Samsung Heavy Industries
	Mar	Floating Production Unit (FPU)	1 unit	USD 1.3 billion	Total, France	First half of 2016	Hyundai Heavy Industries
		Tension Leg Platform (TLP)	1 unit	USD 700 million	Total, France	First half of 2015	Hyundai Heavy Industries
	Apr	FPSO	1 unit	USD 1.9 billion	Chevron, U.S.A	-	Hyundai Heavy Industries
	May	Semi-Submersible Drilling Rig	1 unit	USD 750 million	Diamond Offshore, U.S.A	Nov of 2015	Hyundai Heavy Industries

	Jun	Ultra-deepwater Drillship	1 unit	USD 515 million	Ensco, United Kingdom	Third quarter of 2015	Samsung Heavy Industries
		FPSO	1 unit	USD 3.0 billion	Nigeria	Second half of 2017	Samsung Heavy Industries
		Jack-up Rig	2 units	USD 1.3 billion	Statoil, Norway	-	Samsung Heavy Industries
	Jul	Ultra-deepwater Drillship	2 units	USD 600 million	Seadrill, Norway	Second half of 2015	Samsung Heavy Industries
		Semi-Submersible Rig	1 vessel	USD 718 million	Stena, Sweden	First half of 2016	Samsung Heavy Industries
		Ultra-deepwater Drillship	1 unit	USD 570 million	Atwood Oceanics, U.S.A	The end of 2015	Daewoo Shipbuilding & Marine Engineering
	Sep	Drillship	1 unit	USD 550 million	-	Dec of 2015	Samsung Heavy Industries
		Ultra-deepwater Drillship	1 unit	USD 600 million	Ocean Rig, Greece	Dec of 2015	Samsung Heavy Industries
		Jack-up Rig	1 unit	USD 530 million	Maersk Drilling, Denmark	The middle of 2016	Daewoo Shipbuilding & Marine Engineering
	Oct	Drillship	2 vessels	USD 1.24 billion	-	Second half of 2015	Daewoo Shipbuilding & Marine Engineering
		Drillship	1 vessel	USD 520 million	Transocean, U.S.A	The middle of 2016	Daewoo Shipbuilding & Marine Engineering
		LNG-FSRU	1 unit	-	Gas Sayago (Joint venture)	Sep of 2016	Daewoo Shipbuilding & Marine Engineering
	Dec	LNG-FSRU	1 unit	-	BW Maritime, Singapore	Early 2016	Samsung Heavy Industries
		LNG-FSRU	1 unit	-	Mitsui OSK Line, Japan	The middle of 2016	Daewoo Shipbuilding & Marine Engineering
2014	Feb	LNG-FPSO	1 unit	USD 1.45 billion	Petroliam Nasional Berhad, Malaysia	2018	Samsung Heavy Industries
	Apr	Drillship	2 vessels	USD 1.29 billion	Oceania	First half of 2017	Samsung Heavy Industries
	Jul	Central Processing Platform	2 units	USD 700 million	Hess E&P Malaysia, Malaysia	The end of 2016	Hyundai Heavy Industries
		Fixed offshore platform	4 units	USD 1.94 billion	ADMA-OPCO, UAE	The end of 2019	Hyundai Heavy Industries
	Nov	Fixed Offshore Platform & Submarine Cable	4 units	USD 1.9 billion	ADMA-OPCO	Second half of 2019	Hyundai Heavy Industries
		Offshore Platform	1 unit	USD 700 Million	Royal Dutch Shell	-	Samsung Heavy Industries
		FPU	1 unit		-	-	
2015	Jun	Offshore Platform	2 unit	USD 1.06 billion	Statoil, Norway	The end of 2018	Samsung Heavy Industries
	Jul	FLNG	3 unit	USD 4.7 billion	Royal Dutch-Shell	-	Samsung Heavy Industries
2016	Dec	LNG-FSRU	1 unit	USD 587 million	Maran Gas Maritime, Greece	First half of 2020	Daewoo Shipbuilding & Marine Engineering
2017	Jan	FPU	1 unit	USD 1.27 billion	British Petroreum, United Kingdom	Augst of 2020	Samsung Heavy Industries
		FSRU	1 unit	USD 230 million	Höegh LNG, Norway	May of 2019	Samsung Heavy Industries
		FSRU	1 unit	USD 230 million	Höegh LNG, Norway	4th quarter of 2018	Hyundai Heavy Industries
	Feb	FSRU	1 unit	-	Turkey	-	Hyundai Heavy Industries
	Jun	FLNG	1 unit	USD 2.50 billion	ENI, Italy	-	Samsung Heavy Industries
	Aug	FSRU	1 unit	USD 230 million	Swan Energy, India	First half of 2020	Hyundai Heavy Industries
	Oct	LNG-FSRU	1 unit	KRW 250 billion	Marubeni-Sojitz-Pertamina Consortium	-	Samsung Heavy Industries
	Dec	LNG-FSRU	1 unit	-	Maran Gas Maritime, Greece	-	Daewoo Shipbuilding & Marine Engineering

*Note : Based on the press release and public announcements of each shipyards, internal estimation of Monthly KORSHIP (estimation until Jun 15, 2018)

Eco-friendly LNG carriers pulling the shipbuilding industry out of recession!

Shipbuilding industry is showing signs of recovery on the back of rising demand for eco-friendly vessels powered by LNG, particularly, after the enforcement of ever-more stringent environmental regulations of the IMO(International Maritime Organization). Keeping pace with this trend, Korean shipyards which have the unrivalled technological leadership in this field is proceeding vigorously with marketing efforts to win new orders.

'Eco-friendliness' is considered to be the key driver for pulling the shipbuilding industry out of recession. That is because Korea's three domestic shipbuilding heavyweights, such as DSME (Daewoo Shipbuilding & Marine Engineering), HHI (Hyundai Heavy Industries), and SHI (Samsung Heavy Industries), have unique technologies related to construction of LNG carriers.

EXEMPLAR

GASLOG SANTIAGO

L N G

MARAN GAS CORONIS

L N G

New Product

New Simrad V3100 Class B AIS

Navico Inc.

The new Simrad V3100 Class B AIS is designed to meet the needs of light commercial vessels and workboats operating in high-traffic areas. SOTDMA technology and increased output power provide improved transmission reliability and range, in a cost-effective package for vessels that require greater performance than standard Class B AIS but do not require a full Class A solution.

The V3100 Class B AIS incorporates the same SOTDMA technology found in Class A systems. This self-organising transmission technology allows the V3100 to negotiate a regular transmission timeslot with other AIS units in range, facilitating more frequent and reliable position updates in areas of high AIS activity such as crowded harbours and waterways.

With a maximum transmission power of five Watts - more than double the output power of standard Class B systems - the V3100 allows a vessel to be detected at greater range and provides more reliable transmission to satellite-based AIS receivers.

This 'black box' AIS solution is designed to work with Simrad multifunction displays and other NMEA 2000® or NMEA 0183® connected marine electronics.

-TEL: +612-9936-1000
-http://www.navico.com

SEA-Mate® BOB Technology

Maersk Fluid Technology

Maersk Fluid Technology (MFT) have advanced their SEA-Mate® Blending-on-Board (BOB) technology with integrated software that automates the system's function to produce Fit-for-Purpose cylinder lubricants using data received from sensors onboard.

Originally developed by Maersk for use on A.P Moller-Maersk Group's fleet of containerships, MFT's BOB technology allows for the blending of the in-use system oil, as a base oil, with a high-BN cylinder oil product to produce a Fit-for-Purpose cylinder lubricant and facilitate the addition of fresh system oil to the engine sump.

The use of this technology can reduce cylinder oil consumption and alleviate issues such as cold corrosion and excessive cylinder wear. It can also mitigate issues associated with worn system oil causing problems for the hydraulic control system in modern, electronic controlled two-stroke engines.

The SEA-Mate® BOB product line has comprised of three models; B500, B1000 and B3000. These have had different capacity making them suitable for different engine sizes.

The new model range; B500 Mk2, B1000 Mk2, B3000 will continue to have many of the tried and tested characteristics. The main difference is that the B500 Mk2 and B1000 Mk2 will have the same nominal capacity i.e. be suitable for the same engine sizes and the difference will be in the control system. The B1000 Mk2 will have the option to be an automated model of the BOB system that use output signals from the ship's Engine Control System and additional external sensors for engine condition as input parameters to provide the necessary information required to safely operate system and engines by optimising the cylinder oil properties.

-TEL: +45-3363-4106
-http://www.maerskfluid.com

New Product

Pressure Gauge Portfolio to Help Plants Improve Reliability

Emerson Automation Solutions

Emerson has introduced the Rosemount Smart Pressure Gauge to help users gain better visibility of field changes.

The Smart Pressure Gauge utilizes industry-proven Rosemount pressure sensor technology to deliver reliable pressure readings. With the flexibility to accommodate changing process conditions, the Smart Pressure Gauge gives up to 150X overpressure protection and provides a safer field environment. By utilizing two layers of process isolation, the Smart Pressure Gauge can help prevent process failures from becoming dangerous by preventing employee contact with process fluid by keeping it safely inside the pipe.

The gauge's Rosemount pressure sensor technology replaces 100-year-old bourdon tube gauge technology, eliminating weak points common to mechanical gauges. Mechanical gauges are plagued with quality and reliability issues associated with overpressure, vibration, corrosion, extreme temperatures and accidental damage, and can contribute to numerous reliability and safety issues in plant environments. Additionally, mechanical gauges are unable to communicate device status.

With up to a 10-year life, which reduces maintenance cost and time, and increased visibility from a large 4.5-inch face with status indicator light, the gauge provides easy field visibility. The new Rosemount Smart Pressure Gauge expands the Emerson gauge portfolio.

"The industry response to the Rosemount Wireless Pressure Gauge has been positive, and now with the addition of the Smart Pressure Gauge, our customers have even more options for upgrading their problematic gauges," said Sven Hendrickson, product manager for pressure gauges.

-TEL: +82-2-3438-4600
-http://www2.emersonprocess.com

솔리드 엣지 2019 버전

지멘스 PLM 소프트웨어

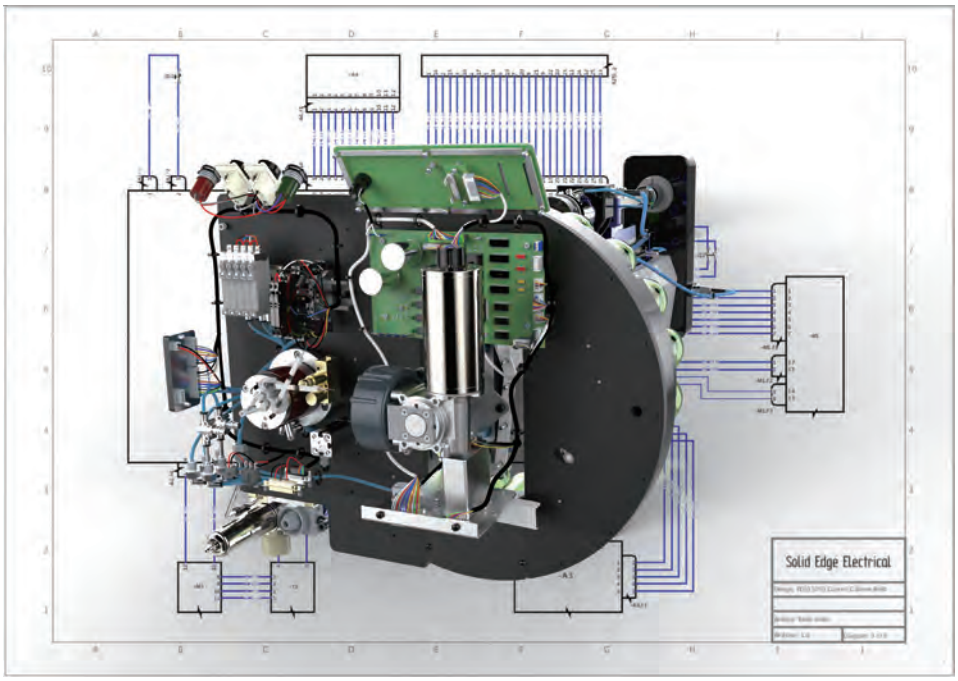

지멘스 PLM 소프트웨어는 3D CAD 솔루션인 솔리드 엣지 소프트웨어(Solid Edge Software)의 최신 버전인, 솔리드 엣지 2019를 출시했다. 이 소프트웨어는 사용하기 쉽고 경제적인 포트폴리오를 통해, 전기적 설계, 시뮬레이션, 제조, 기술 문서화 및 데이터 관리 등 제품 개발 프로세스의 모든 측면에서 사용할 수 있는 우수한 기능을 제공한다.

솔리드 엣지 2019에는 동급 최강의 전기 및 인쇄회로기판(PCB) 설계 기술과 새로운 요구 사항 관리 기능, 통합된 시뮬레이션 분석, 절삭·적층 가공용 최신 도구와 무료 보안 클라우드 기반 프로젝트 협업 등의 기능이 추가되었다. 기능이 한층 확장된 이번 포트폴리오는 다양한 규모의 비즈니스 고객이 엔드-투-엔드 디지털 트윈(Digital Twin)의 이점을 활용해 혁신을 실현할 수 있도록 지원한다.

최신 버전의 솔리드 엣지는 P&ID와 배관 설계를 포함하여 새로운 모듈식 플랜트 설계 기능을 제공한다. 솔리드 엣지 P&ID 설계는2D 플로 다이어그램(flow diagram)과 심볼 라이브러리를 제공하며 플랜트 설계에 필요한 엄격한 관리 요건을 지원한다. 새로운 기능인 자동화된 3D 배관 설계와 완전 자동화 아이소메트릭(isometric) 도면 출력은 솔리드 엣지 배관 설계 기능과 결합되어 설계 오류를 줄이고, 플랜트 산업을 비롯한 여러 산업에 효율적인 배관 설계를 보장한다.

새로운 적층 제조용 설계에는 모양이나 무게, 강도 등에 대한 제어 강화와 구체적 안전 요소가 포함되어 있다. 고객은 이를 활용해 이전에는 할 수 없었던 새로운 설계를 생성할 수 있다. 또한 솔리드 엣지는 다중 색상, 다중 재료 프린트 기능을 포함한 프린트 준비를 자동화 해 원자재 소요와 부품 재고를 줄이고, 값비싼 제조 장비에 대한 의존도를 줄여준다. 이와 같은 새로운 기능을 활용해 제조사들은 매우 신속하고 경제적인 방식으로 낮은 생산 로트(production lots)를 생산할 수 있다.

솔리드 엣지 2019의 새로운 기능인 솔리드 엣지 캠 프로(Solid Edge CAM Pro)는 최신 가공 기술로 CNC 공장 기계를 효율적으로 프로그래밍 해 부품이 설계대로 제작되었는지 확인할 수 있는 포괄적이며 고도로 유연한 시스템이다.

-TEL: +82-3450-7000
-http://www.siemens.co.kr

KORSHIP
Shipbuilding
Offshore
Oil & Gas
Offshore wind

Registration No. : Youngdungpo Ra 00220
Published on Jul. 5. 2018
Publisher Yoseob Choi
Editor-in-Chief Chunghoon Lee
Senior Editor Chanyoung Choi
Designer Youngeun Lee
Marketing Manager Sungsu Park
Kijong Seo
Jongki Hong

Printed by Hyung-Je Art Printing
Printed (CTP) by Hyung-Je Art Printing
Published by PROCON

Address: Room. 708 ACE Techno Tower, 12, Dangsan-ro 2-gil, Yeongdeungpo-gu, Seoul, Korea (Postcode: 07299)
Tel : +82-2-2168-8898
Fax : +82-2-6442-2168
International : +82-10-5604-7311 (Chanyoung Choi)

www.korship.co.kr www.procon.co.kr
E-mail : korshipeditor@gmail.com
Price per Copy : ₩10,000
Annual Subscription Fee : ₩100,000

Bank of receipt	
Kiup Bank	083-038571-04-013
Kook Min Bank	757-21-0285-181
Shin Han Bank	284-05-012954
Woo Ri Bank	182-07-168838
* Deposit person : PROCON (Choi Yo Seob)	

This Publication Keeps publication ethics charter of "Korea Publication Ethics commission" and any unauthorized replication or modification without Procon's permission is strictly prohibited.

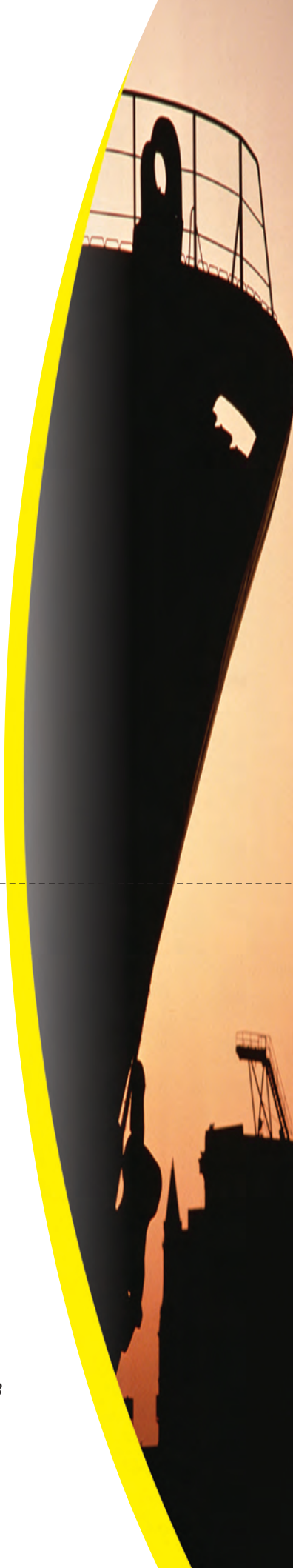

Application of Subscription

Company's Name :

Applicant :

Address :

Term of Subscription : From M/Y ~ To M/Y

Tel : Fax :

Rate of Subscription : 1 Month / 10,000(Korean Won)
1 Year / 100,000(Korean won)
(Air postage will be charged for foreign countries.)

Inquiry : Tel / +82-2-2168-8898
Fax / +82-2-6442-2168
E-mail : victory@procon.co.kr